Article datasheet

Square Thin Nut DIN562 M6 Zinc Plated Steel 4.8

Article-No.: 002.90.964



Image may be similar

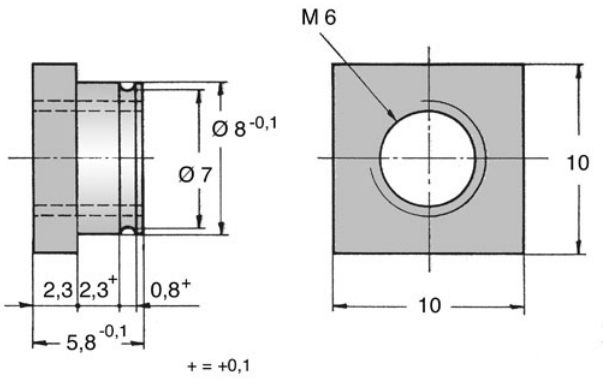

AF / OD [mm]:	10
DIN/ISO:	DIN562
Finish:	Zinc Plated, 5 µm, A2K
Height [mm]:	5.8
Material:	Steel 4.8
Thread Size:	M6
Weight:	1.92g

Conformities

RoHS compliant:	Yes
Application of RoHS Annex III exemptions:	Yes
REACH compliant:	Yes
SVHC free:	No
SVHC substances:	Listed substance): Lead - CAS-No. 7439-92-1

Note: Information on SVHC substances specific to your individual deliveries can be found on your respective delivery note.

You can find all information on the web on our article detail page
Square Thin Nut DIN562 M6 Zinc Plated Steel 4.8

Would you like individual advice?
We look forward to your email to products@ettinger.de.

Subject to change and errors.

ETTINGER GmbH
Ottostraße 5 | 85649 Hofolding | Deutschland | www.ettinger.de | info@ettinger.de | + 49 8104 66 23 88