Article datasheet

Countersunk Screw ISO7046 M3x8 A4 Plain Stainless Steel Cross Recessed

Article-No.: 001.12.339

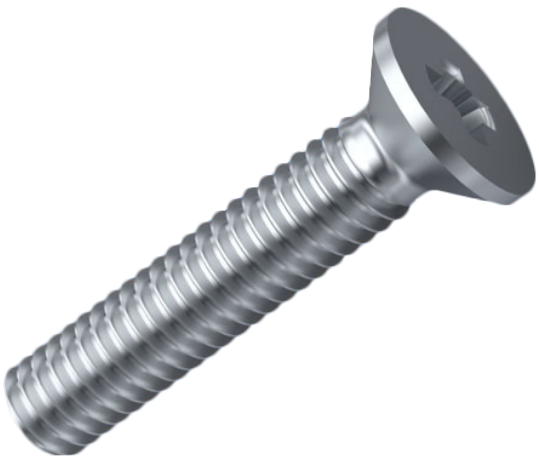

Image may be similar

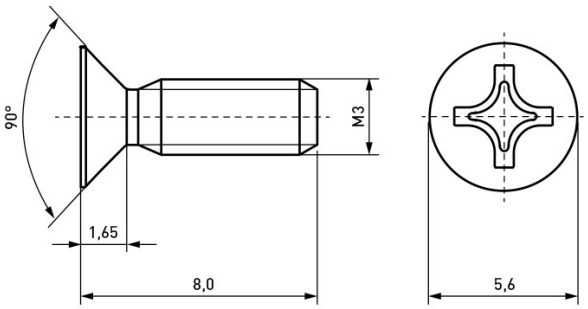

Actuator Size:	Phillips PH1
DIN/ISO:	ISO7046
Drive Type:	Cross Recess / Phillips-H
Finish:	Plain
Head Diameter [mm]:	5.6
Head Height [mm]:	1.65
Head Shape:	Countersunk Head
Length [mm]:	8
Material:	Stainless Steel AISI 316 / A4
Thread Size:	M3
Weight:	0.34g

Conformities

RoHS compliant:	Yes
REACH compliant:	Yes
SVHC free:	Yes

Note: Information on SVHC substances specific to your individual deliveries can be found on your respective delivery note.

You can find all information on the web on our article detail page
Countersunk Screw ISO7046 M3x8 A4 Plain Stainless Steel Cross Recessed

Would you like individual advice?
We look forward to your email to products@ettinger.de.

Subject to change and errors.

ETTINGER GmbH

Ottostraße 5 | 85649 Hofolding | Deutschland | www.ettinger.de | info@ettinger.de | + 49 8104 66 23 88