Article datasheet

Edge Protection 10.5x14.5mm PVC,black with steel tape 2.0-5.0mm

Article-No.: 014.90.500

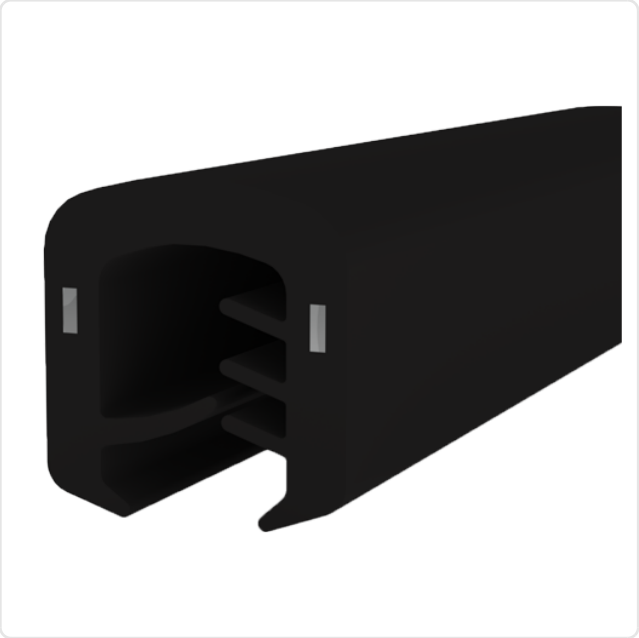

Image may be similar

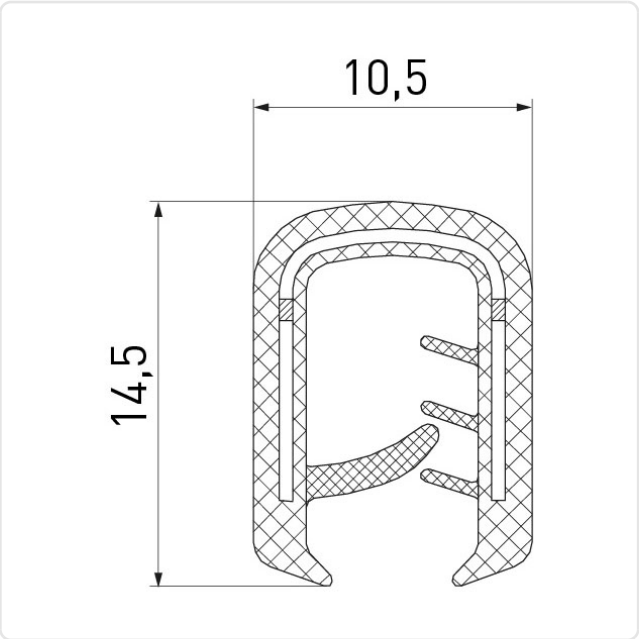

Color:	Black
Height [mm]:	14.5
Material:	PVC - Polyvinyl Chloride
Model:	U Profile
Reel Lenght [m]:	100
Width [mm]:	10.5
Weight:	164.8g

Conformities

RoHS compliant:	Yes
Application of RoHS Annex III exemptions:	Yes
REACH compliant:	Yes
SVHC free:	No
SVHC substances:	Listed substance): Lead - CAS-No. 7439-92-1

Note: Information on SVHC substances specific to your individual deliveries can be found on your respective delivery note.

You can find all information on the web on our article detail page
Edge Protection 10.5x14.5mm PVC,black with steel tape 2.0-5.0mm

Would you like individual advice?
We look forward to your email to products@ettinger.de.

Subject to change and errors.

ETTINGER GmbH
Ottostraße 5 | 85649 Hofolding | Deutschland | www.ettinger.de | info@ettinger.de | + 49 8104 66 23 88