Article datasheet

Fan mount for fan-hole ø3.2-4.5mm Silicon 40 Shore A,black RMS-316

Article-No.: 057.90.100

Image may be similar

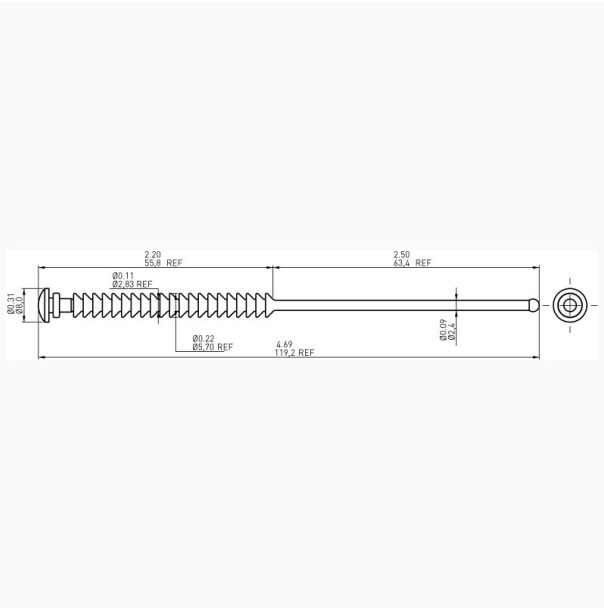

Color:	Black
Material:	Silicone
Material Group:	Kunststoff
Model:	Quick Fastener
Weight:	0.53g
Conformities:	Reach COMPLIANT, RoHS COMPLIANT, SVHC COMPLIANT

You can find all information on the web on our article detail page
Fan mount for fan-hole ø3.2-4.5mm Silicon 40 Shore A,black RMS-316

Would you like individual advice?
We look forward to your email to products@ettinger.de.

Subject to change and errors.