Article datasheet

Rivet Foot Ø21.0x4.2 TPE black

Article-No.: 017.76.624



Image may be similar

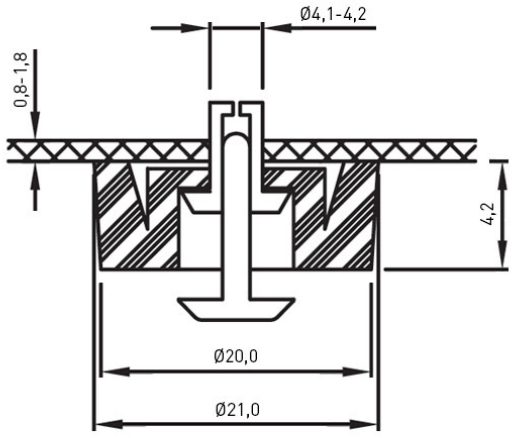

Color:	Black
Diameter [mm]:	21
Flammability Class:	UL94-HB
Height [mm]:	4.2
Material:	TPR - Thermoplastic Elastomer
Panel Hole Ø [mm]:	4.2
Panel Thickness [mm]:	0,8-1,8
Weight:	1.06g

Conformities

RoHS compliant:	Yes
REACH compliant:	Yes
SVHC free:	Yes

Note: Information on SVHC substances specific to your individual deliveries can be found on your respective delivery note.

You can find all information on the web on our article detail page
Rivet Foot Ø21.0x4.2 TPE black

Would you like individual advice?
We look forward to your email to products@ettinger.de.

Subject to change and errors.

ETTINGER GmbH

Ottostraße 5 | 85649 Hofolding | Deutschland | www.ettinger.de | info@ettinger.de | + 49 8104 66 23 88