Article datasheet

Knurled Knobs / for Hex Screws / ø11mmx4.5mm / orange

Article-No.: 002.39.033

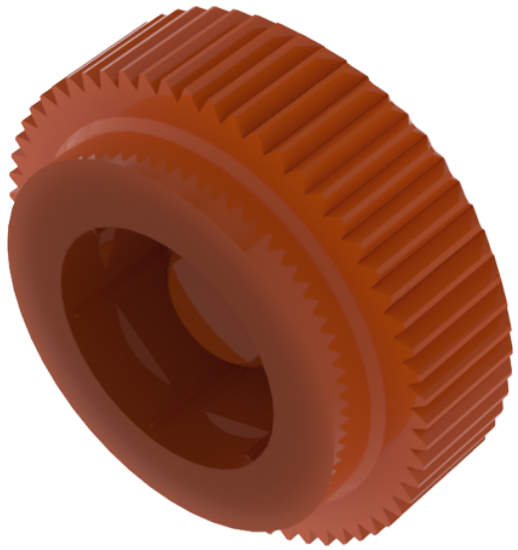

Image may be similar

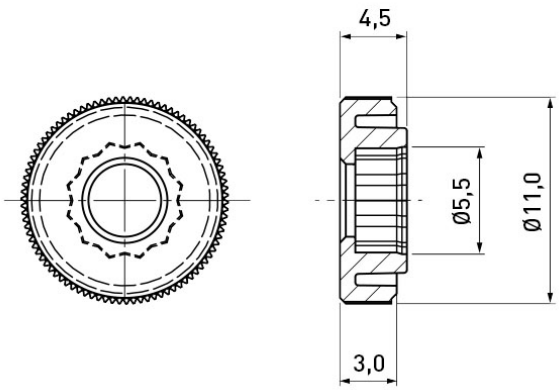

Color:	Orange
Diameter [mm]:	11
Flammability Class:	UL94-HB
Height [mm]:	4.5
Material:	POM - Polyoxymethylene
Thread Size:	M3
Weight:	0.4g

Conformities

RoHS compliant:	Yes
REACH compliant:	Yes
SVHC free:	Yes

Note: Information on SVHC substances specific to your individual deliveries can be found on your respective delivery note.

You can find all information on the web on our article detail page [Knurled Knobs / for Hex Screws / ø11mmx4.5mm / orange]

Would you like individual advice?
We look forward to your email to products@ettinger.de.

Subject to change and errors.

ETTINGER GmbH

Ottostraße 5 | 85649 Hofolding | Deutschland | www.ettinger.de | info@ettinger.de | + 49 8104 66 23 88