Article datasheet

Female Faston 4.8x0.8mm Brass tinned for hole ø1.3mm

Article-No.: 019.48.171



Image may be similar

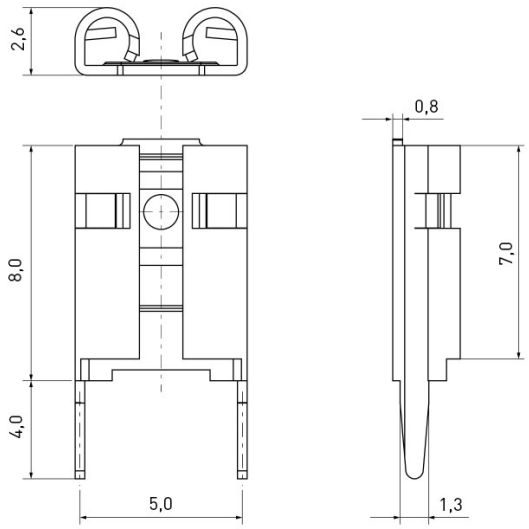

Finish:	Tin-Plated
Length [mm]:	8
Material:	Brass lead-free
Size [mm]:	4.8x0.8
Weight:	0.35g

Conformities

RoHS compliant:	Yes
REACH compliant:	Yes
SVHC free:	Yes

Note: Information on SVHC substances specific to your individual deliveries can be found on your respective delivery note.

You can find all information on the web on our article detail page
Female Faston 4.8x0.8mm Brass tinned for hole ø1.3mm

Would you like individual advice?
We look forward to your email to products@ettinger.de.

Subject to change and errors.

ETTINGER GmbH

Ottostraße 5 | 85649 Hofolding | Deutschland | www.ettinger.de | info@ettinger.de | + 49 8104 66 23 88