Article datasheet

Pan Head Screw ISO7045 M2.5x8 Steel 4.8 Black Zinc Plated Cross Recess

Article-No.: 001.17.230



Image may be similar

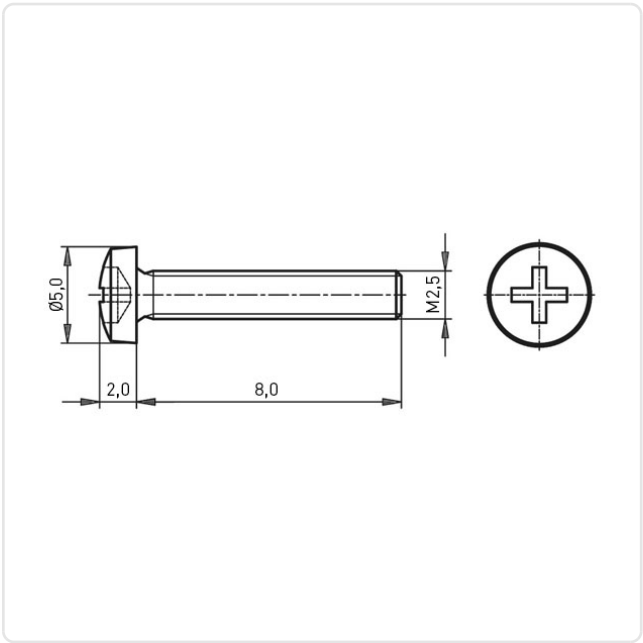

Actuator Size:	Phillips PH1
DIN/ISO:	ISO7045
Drive Type:	Cross Recess / Phillips-H
Finish:	Zinc Plated, 5 µm, A2K
Head Diameter [mm]:	5
Head Height [mm]:	2
Head Shape:	Pan Head
Length [mm]:	8
Material:	Steel 4.8
Thread Size:	M2.5
Weight:	0.44g

Conformities

RoHS compliant:	Yes
Application of RoHS Annex III exemptions:	Yes
REACH compliant:	Yes
SVHC free:	No
SVHC substances:	Listed substance): Lead - CAS-No. 7439-92-1

Note: Information on SVHC substances specific to your individual deliveries can be found on your respective delivery note.

You can find all information on the web on our article detail page
Pan Head Screw ISO7045 M2.5x8 Steel 4.8 Black Zinc Plated Cross Recess

Would you like individual advice?
We look forward to your email to products@ettinger.de.

Subject to change and errors.

ETTINGER GmbH
Ottostraße 5 | 85649 Hofolding | Deutschland | www.ettinger.de | info@ettinger.de | + 49 8104 66 23 88