ETTINGER
Elektronik-Bauelemente

Article datasheet

Battery Contact Spring Uni Size Spring stee nickel plated - PCB mounting

Article-No.: 015.83.313

Manufacturer: Keystone Electronics

Manufacturer article-no.: 108-2

Image may be similar

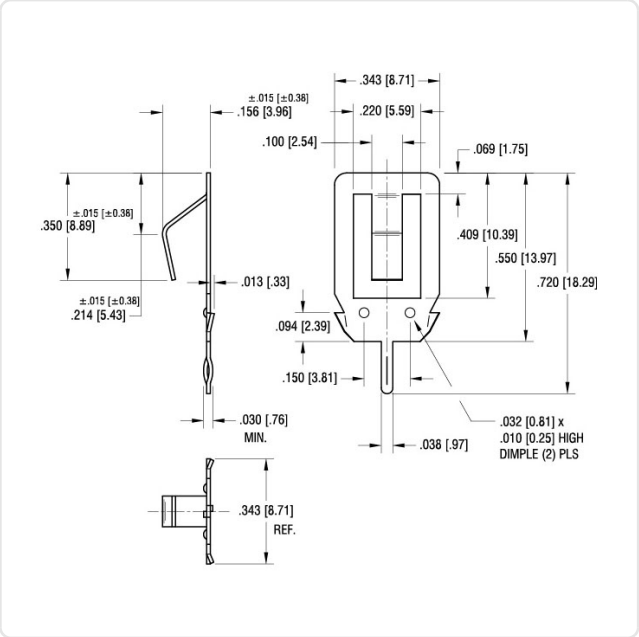

Width [mm]: 8.7

Weight: 0.24g

Conformities: Reach COMPLIANT, RoHS COMPLIANT, SVHC NOT COMPLIANT

You can find all information on the web on our article detail page

Would you like individual advice?
We look forward to your email to products@ettinger.de.

Subject to change and errors.

ETTINGER GmbH

Ottostraße 5 | 85649 Hofolding | Deutschland | www.ettinger.de | info@ettinger.de | + 49 8104 66 23 88