Article datasheet

Polysnap C14 IEC Inlet Snap-In Single Fused with Filter 6A

Article-No.: 044.51.041



Image may be similar

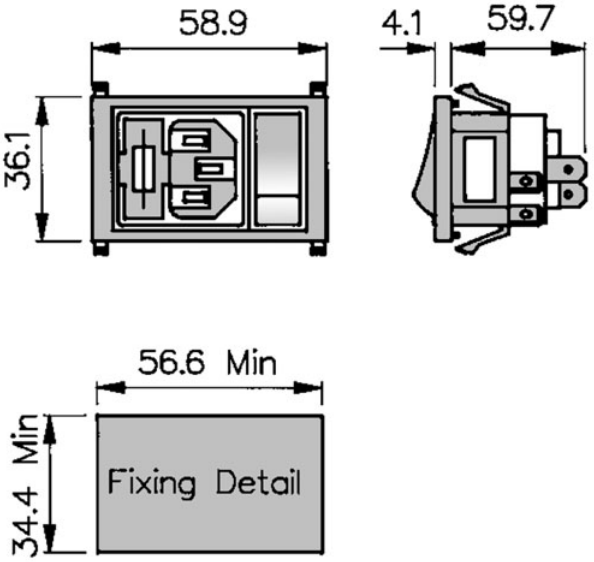

Color:	Black
Connections:	6.3x0.8
Finish:	Nickel-Plated, 3 µm, E1E
Material:	Brass, Plastic
Model:	Plug, Snap-In Mounting
Panel Thickness [mm]:	3
Weight:	58.4g

Conformities

RoHS compliant:	Yes
REACH compliant:	Yes
SVHC free:	Yes

Note: Information on SVHC substances specific to your individual deliveries can be found on your respective delivery note.

You can find all information on the web on our article detail page
Polysnap C14 IEC Inlet Snap-In Single Fused with Filter 6A

Would you like individual advice?
We look forward to your email to products@ettinger.de.

Subject to change and errors.

ETTINGER GmbH
Ottostraße 5 | 85649 Hofolding | Deutschland | www.ettinger.de | info@ettinger.de | + 49 8104 66 23 88