Article datasheet

Continuous Grommet Strip 0.8-1.0mm Polyethylen,natural/reel with 35m

Article-No.: 014.91.101

Manufacturer: SES-Sterling

Manufacturer article-no.: 0826 0001 018

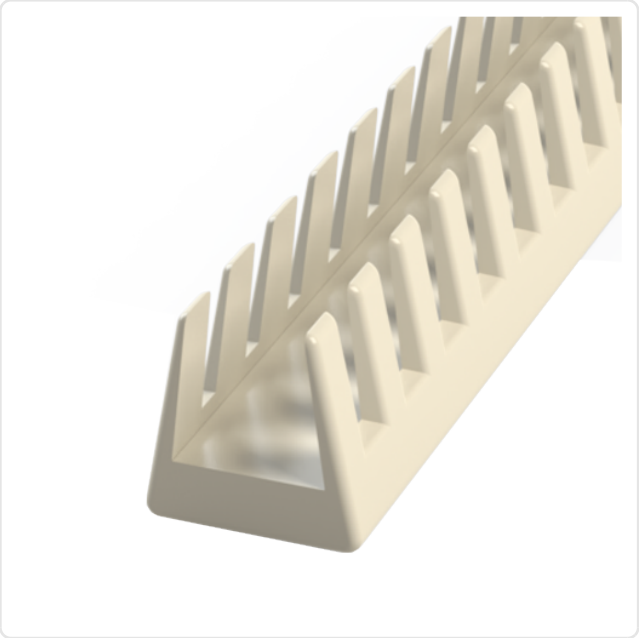

Image may be similar

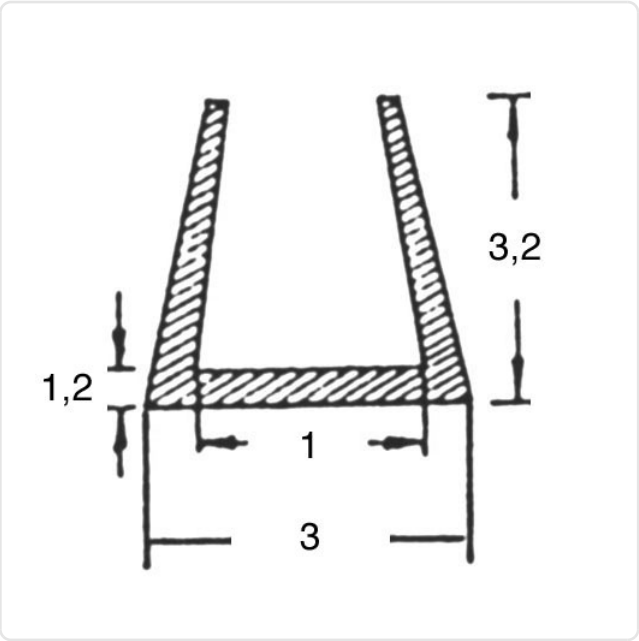

Application Thickn. [mm]:	1
Color:	Natural
Height [mm]:	3.2
Material:	PE - Polyethylene
Model:	Toothed
Panel Thickness [mm]:	0,8-1,0mm
Reel Lenght [m]:	35
Weight:	1.89g

Conformities

RoHS compliant:	Yes
REACH compliant:	Yes
SVHC free:	Yes

Note: Information on SVHC substances specific to your individual deliveries can be found on your respective delivery note.

You can find all information on the web on our article detail page
Continuous Grommet Strip 0.8-1.0mm Polyethylen,natural/reel with 35m

Would you like individual advice?
We look forward to your email to products@ettinger.de.

Subject to change and errors.

ETTINGER GmbH

Ottostraße 5 | 85649 Hofolding | Deutschland | www.ettinger.de | info@ettinger.de | + 49 8104 66 23 88