Article datasheet

Contact Washer Ø3.2/6.0 x 0.6 Zinc Plated Steel

Article-No.: 003.20.031

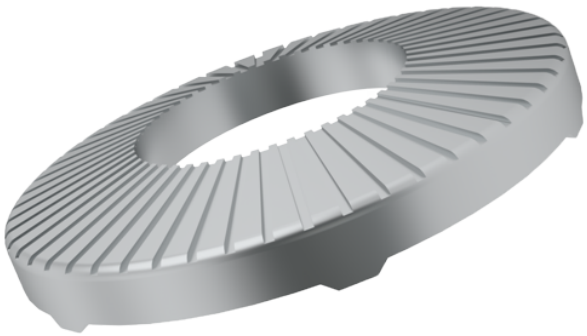

Image may be similar

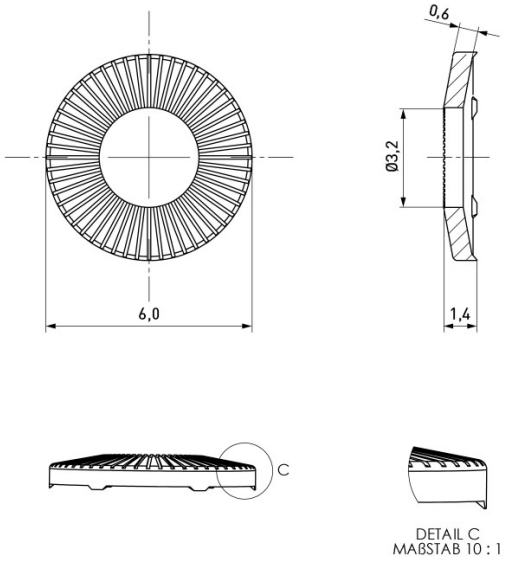

Finish:	Zinc Plated, 15–25 µm
For Thread Size:	M3
Height [mm]:	0.6
Inner Diameter [mm]:	3.2
Material:	Spring Steel, lead-free
Outer Diameter [mm]:	6
Weight:	0.09g

Conformities

RoHS compliant:	Yes
REACH compliant:	Yes
SVHC free:	Yes

Note: Information on SVHC substances specific to your individual deliveries can be found on your respective delivery note.

You can find all information on the web on our article detail page
Contact Washer Ø3.2/6.0 x 0.6 Zinc Plated Steel

Would you like individual advice?
We look forward to your email to products@ettinger.de.

Subject to change and errors.

ETTINGER GmbH
Ottostraße 5 | 85649 Hofolding | Deutschland | www.ettinger.de | info@ettinger.de | + 49 8104 66 23 88