Article datasheet

Insulated Standoff PA-Brass F/F AF8x40 | Thread M4x6 / M4x6

Article-No.: 005.57.440



Image may be similar

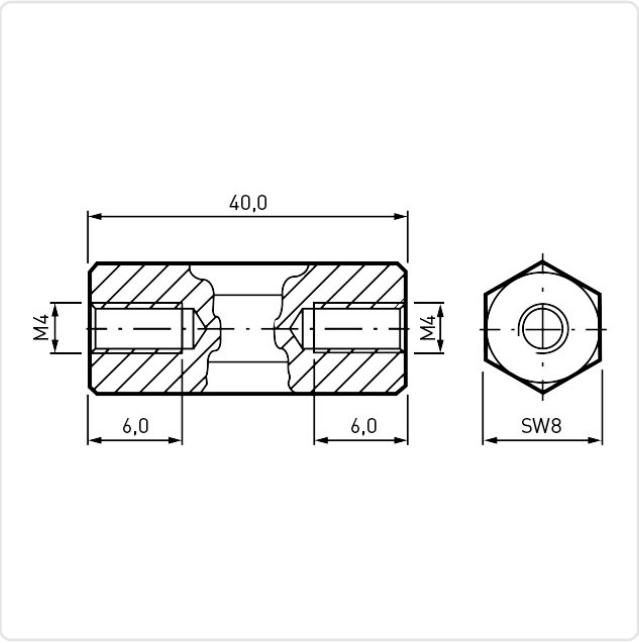

AF / OD [mm]:	8
Flammability Class:	UL94-V2
Length [mm]:	40
Material:	PA 6.6
Profile:	Hexagonal
Thread 1 Length [mm]:	6
Thread 1 Size:	M4
Thread 2 Length [mm]:	6
Thread 2 Size:	M4
Thread Insert Material:	Brass
Weight:	3.34g

Conformities

RoHS compliant:	Yes
REACH compliant:	Yes
SVHC free:	No
SVHC substances:	Listed substance): Lead - CAS-No. 7439-92-1

Note: Information on SVHC substances specific to your individual deliveries can be found on your respective delivery note.

You can find all information on the web on our article detail page
Insulated Standoff PA-Brass F/F AF8x40 | Thread M4x6 / M4x6

Would you like individual advice?
We look forward to your email to products@ettinger.de.

Subject to change and errors.

ETTINGER GmbH

Ottostraße 5 | 85649 Hofolding | Deutschland | www.ettinger.de | info@ettinger.de | + 49 8104 66 23 88