Article datasheet

Modular Housing 53 x 74 x 21.8 gray

Article-No.: 086.71.218

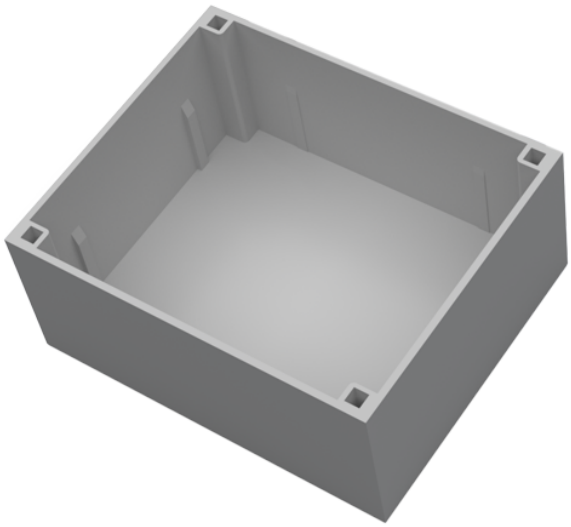

Image may be similar

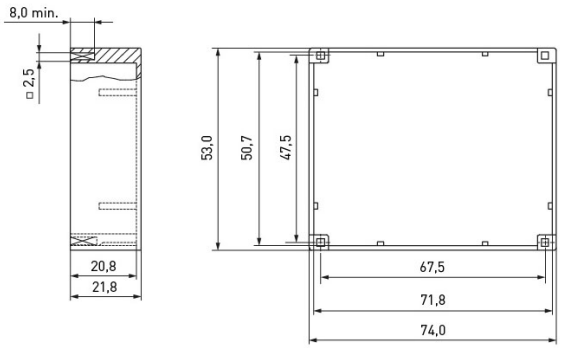

Color:	Gray
Flammability Class:	UL94-HB
Height [mm]:	21.8
Length [mm]:	74
Material:	PA 6.0
Model:	Enclosure without Base Plate
Width [mm]:	53
Weight:	13.7g

Conformities

SVHC free:	Yes

Note: Information on SVHC substances specific to your individual deliveries can be found on your respective delivery note.

You can find all information on the web on our article detail page
Modular Housing 53 x 74 x 21.8 gray

Would you like individual advice?
We look forward to your email to products@ettinger.de.

Subject to change and errors.

ETTINGER GmbH

Ottostraße 5 | 85649 Hofolding | Deutschland | www.ettinger.de | info@ettinger.de | + 49 8104 66 23 88