Article datasheet

Tubular Rivet DIN7340 A 2.0x0.2x4.0 Silver-Plated Brass

Article-No.: 019.72.049



Image may be similar

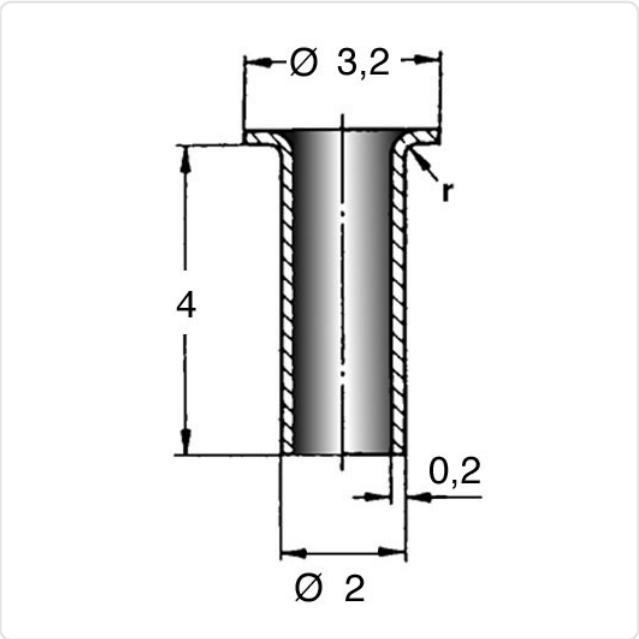

DIN/ISO:	DIN7340A
Finish:	Silver-Plated
Head Diameter [mm]:	3.2
Length [mm]:	4
Material:	Brass CW508L / CuZn37, lead-free
Rivet Diameter [mm]:	2
Wall Thickness [mm]:	0.20
Weight:	0.05g

Conformities

RoHS compliant:	Yes
REACH compliant:	Yes
SVHC free:	Yes

Note: Information on SVHC substances specific to your individual deliveries can be found on your respective delivery note.

You can find all information on the web on our article detail page
Tubular Rivet DIN7340 A 2.0x0.2x4.0 Silver-Plated Brass

Would you like individual advice?
We look forward to your email to products@ettinger.de.

Subject to change and errors.

ETTINGER GmbH

Ottostraße 5 | 85649 Hofolding | Deutschland | www.ettinger.de | info@ettinger.de | + 49 8104 66 23 88