Article datasheet

# Tubular Rivet DIN7340 A 2.5x0.3x10.0 Silver-Plated Brass

**Article-No.: 019.77.109**



**Image may be similar**

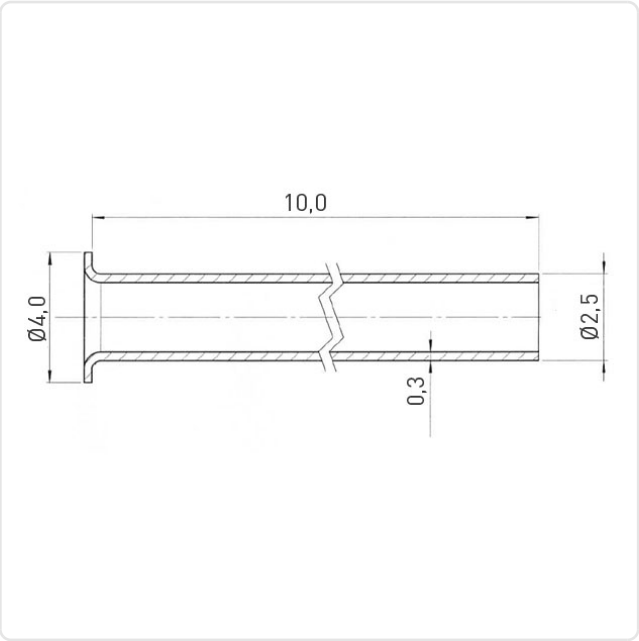


| | |
|---|---|
| DIN/ISO: | DIN7340A |
| Finish: | Silver-Plated |
| Head Diameter [mm]: | 4 |
| Length [mm]: | 10 |
| Material: | Brass CW508L / CuZn37, lead-free |
| Rivet Diameter [mm]: | 2.5 |
| Wall Thickness [mm]: | 0.30 |
| Weight: | 0.2g |

**Conformities**

| | |
|---|---|
| RoHS compliant: | Yes |
| REACH compliant: | Yes |
| SVHC free: | Yes |

**Note:** Information on SVHC substances specific to your individual deliveries can be found on your respective delivery note.

**You can find all information on the web on our article detail page**
**Tubular Rivet DIN7340 A 2.5x0.3x10.0 Silver-Plated Brass**

**Would you like individual advice?**
**We look forward to your email to products@ettinger.de.**

**Subject to change and errors.**

**ETTINGER GmbH**

Ottostraße 5 | 85649 Hofolding | Deutschland | www.ettinger.de | info@ettinger.de | + 49 8104 66 23 88