Article datasheet

# Square Thin Nut DIN562 M2.5 A2 Plain Stainless Steel

**Article-No.: 002.11.022**

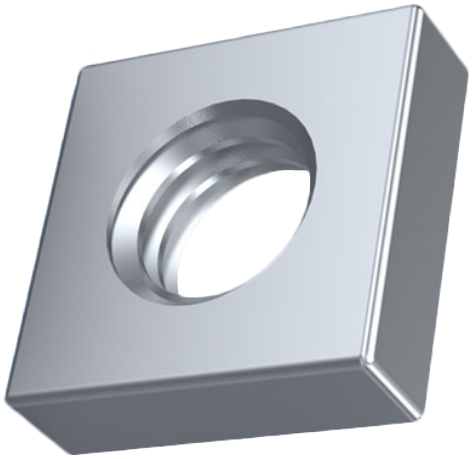

**Image may be similar**

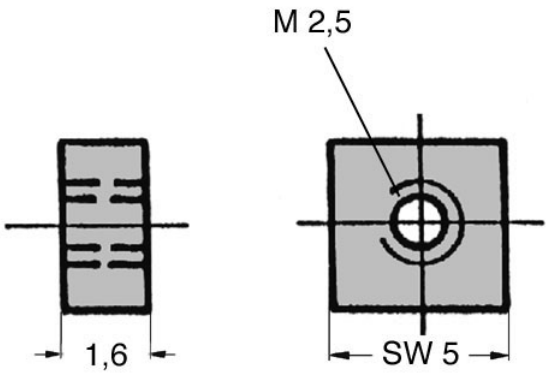


| | |
|---|---|
| AF / OD [mm]: | 5 |
| DIN/ISO: | DIN562 |
| Finish: | Plain |
| Height [mm]: | 1.6 |
| Material: | Stainless Steel AISI 304 / A2 |
| Thread Size: | M2.5 |
| Weight: | 0.21g |

**Conformities**

| | |
|---|---|
| RoHS compliant: | Yes |
| REACH compliant: | Yes |
| SVHC free: | Yes |

**Note:** Information on SVHC substances specific to your individual deliveries can be found on your respective delivery note.

**You can find all information on the web on our article detail page**
**Square Thin Nut DIN562 M2.5 A2 Plain Stainless Steel**

**Would you like individual advice?**
**We look forward to your email to products@ettinger.de.**

**Subject to change and errors.**

**ETTINGER GmbH**
Ottostraße 5 | 85649 Hofolding | Deutschland | www.ettinger.de | info@ettinger.de | + 49 8104 66 23 88