Article datasheet

Split Washer DIN127 B Ø2.6/5.1 x 0.6 A2 Plain Stainless Steel

Article-No.: 003.63.022



Image may be similar

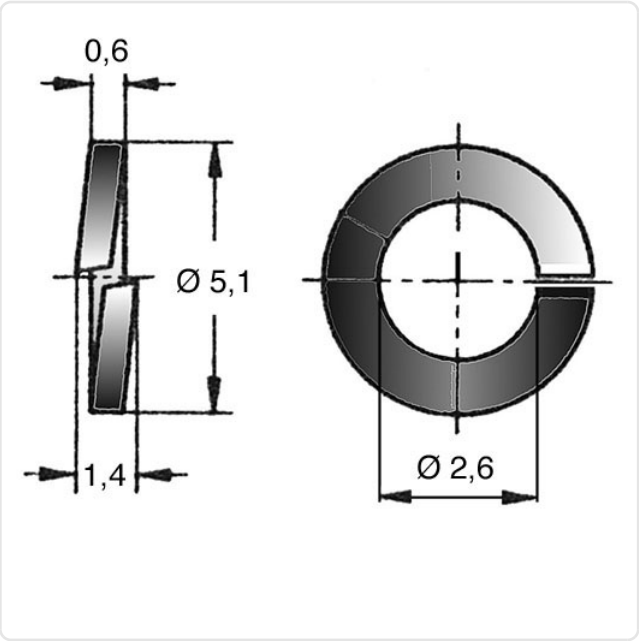

DIN/ISO:	DIN127B
Finish:	Plain
For Thread Size:	M2.5
Height [mm]:	0.6
Inner Diameter [mm]:	2.6
Material:	Stainless Steel AISI 304 / A2
Outer Diameter [mm]:	5.1
Weight:	0.06g

Conformities

RoHS compliant:	Yes
REACH compliant:	Yes
SVHC free:	Yes

Note: Information on SVHC substances specific to your individual deliveries can be found on your respective delivery note.

You can find all information on the web on our article detail page
Split Washer DIN127 B Ø2.6/5.1 x 0.6 A2 Plain Stainless Steel

Would you like individual advice?
We look forward to your email to products@ettinger.de.

Subject to change and errors.

ETTINGER GmbH
Ottostraße 5 | 85649 Hofolding | Deutschland | www.ettinger.de | info@ettinger.de | + 49 8104 66 23 88