ETTINGER
Elektronik-Bauelemente

Article datasheet

Batteryholder 1x Mignon "AA" cell Steel nickel-plated/solder lugs

Article-No.: 015.31.311

Manufacturer: Keystone Electronics

Manufacturer article-no.: 2139

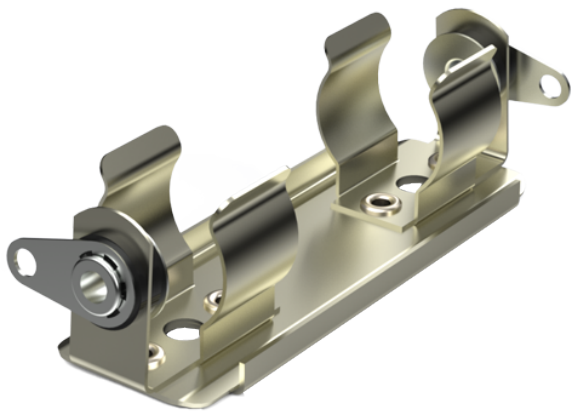

Image may be similar

Battery Type:	AA-Mignon
Finish:	Nickel-Plated, 3 µm, E1E
Material:	Steel
Model:	Solder Tag Connection
No. Cells:	1
Weight:	8.8g
Conformities:	Reach COMPLIANT, RoHS COMPLIANT, SVHC COMPLIANT

You can find all information on the web on our article detail page

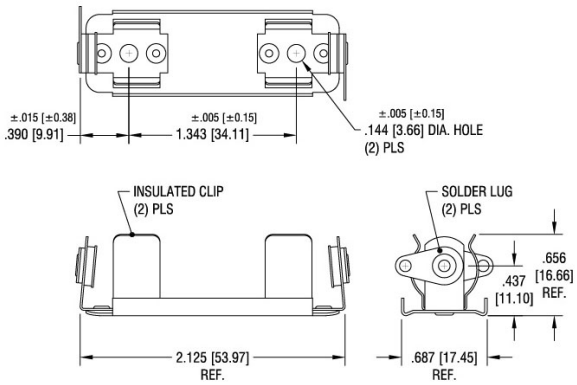

Would you like individual advice?
We look forward to your email to products@ettinger.de.

Subject to change and errors.

ETTINGER GmbH

Ottostraße 5 | 85649 Hofolding | Deutschland | www.ettinger.de | info@ettinger.de | + 49 8104 66 23 88