Article datasheet

PC Mount Screw Terminal M4 Brass tinned for SMD mounting

Article-No.: 013.20.495



Image may be similar

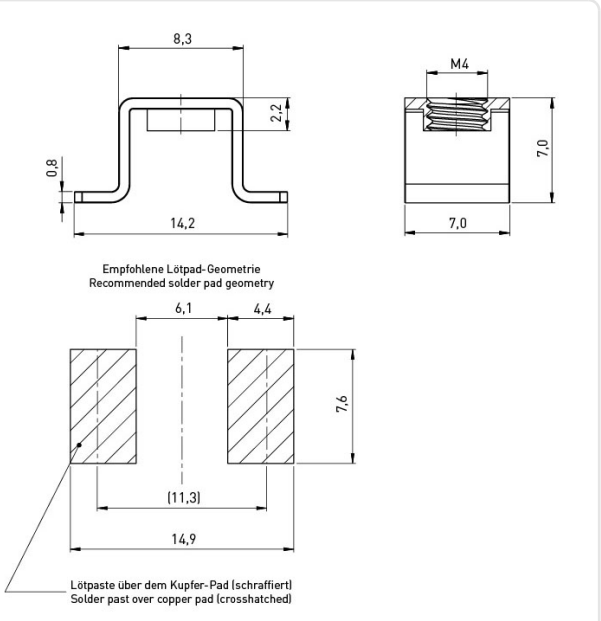

Finish:	Tin-Plated
Grid [mm]:	7.0
Material:	Brass lead-free
Thread Size:	M4
Weight:	1.8g

Conformities

RoHS compliant:	Yes
REACH compliant:	Yes
SVHC free:	Yes

Note: Information on SVHC substances specific to your individual deliveries can be found on your respective delivery note.

You can find all information on the web on our article detail page
PC Mount Screw Terminal M4 Brass tinned for SMD mounting

Would you like individual advice?
We look forward to your email to products@ettinger.de.

Subject to change and errors.

ETTINGER GmbH
Ottostraße 5 | 85649 Hofolding | Deutschland | www.ettinger.de | info@ettinger.de | + 49 8104 66 23 88