Article datasheet

Equipment-handle 200/32mm M5 Alu Handle shanks made of high-duty PA

Article-No.: 029.50.208



Image may be similar

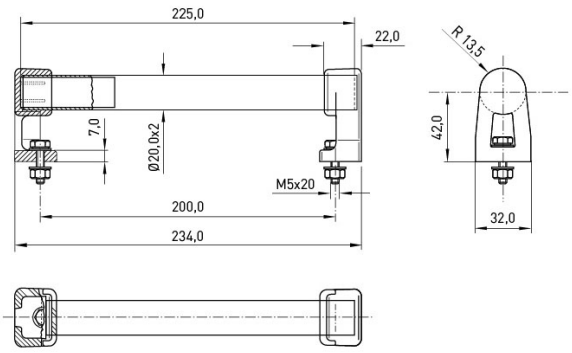

Dist. Mounting Holes [mm]:	200
Finish:	Anodized, Clear
Height [mm]:	42
Material:	Aluminum ENAW-5754 / AlMg3, lead-free
Model:	Equipment Handle
Thread Size:	M5
Width [mm]:	20
Weight:	1.33g

Conformities

RoHS compliant:	Yes
REACH compliant:	Yes
SVHC free:	Yes

Note: Information on SVHC substances specific to your individual deliveries can be found on your respective delivery note.

You can find all information on the web on our article detail page
Equipment-handle 200/32mm M5 Alu Handle shanks made of high-duty PA

Would you like individual advice?
We look forward to your email to products@ettinger.de.

Subject to change and errors.

ETTINGER GmbH

Ottostraße 5 | 85649 Hofolding | Deutschland | www.ettinger.de | info@ettinger.de | + 49 8104 66 23 88