Article datasheet

Insulated Standoff PA-Brass F/F AF6.4x15 | Thread M3x6 / M3x6

Article-No.: 005.41.115



Image may be similar

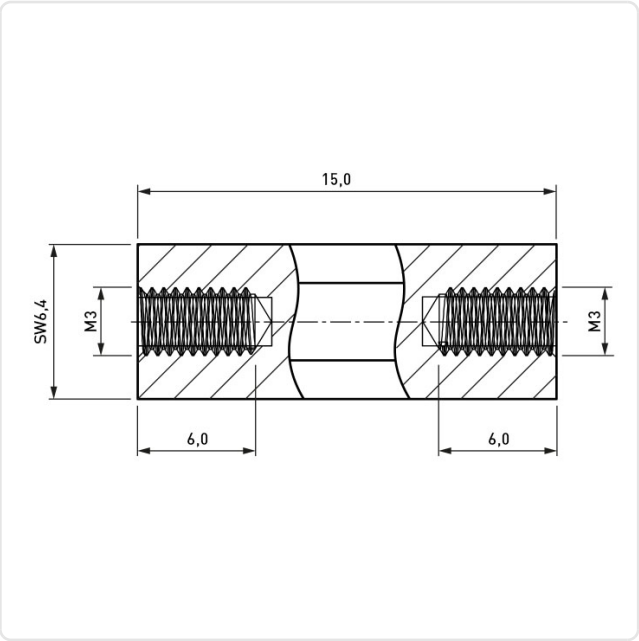

AF / OD [mm]:	6.4
Flammability Class:	UL94-HB
Length [mm]:	15
Material:	PA 6.6
Profile:	Hexagonal
Thread 1 Length [mm]:	6
Thread 1 Size:	M3
Thread 2 Length [mm]:	6
Thread 2 Size:	M3
Thread Insert Material:	Brass
Weight:	1g

Conformities

RoHS compliant:	Yes
Application of RoHS Annex III exemptions:	Yes
REACH compliant:	Yes
SVHC free:	No
SVHC substances:	Listed substance): Lead - CAS-No. 7439-92-1

Note: Information on SVHC substances specific to your individual deliveries can be found on your respective delivery note.

You can find all information on the web on our article detail page
Insulated Standoff PA-Brass F/F AF6.4x15 | Thread M3x6 / M3x6

Would you like individual advice?
We look forward to your email to products@ettinger.de.

Subject to change and errors.

ETTINGER GmbH
Ottostraße 5 | 85649 Hofolding | Deutschland | www.ettinger.de | info@ettinger.de | + 49 8104 66 23 88