Article datasheet

Soldering Tag DIN 41496 4x12B3 Brass tinned 45°angled hole ø4.3mm

Article-No.: 019.05.745

Image may be similar

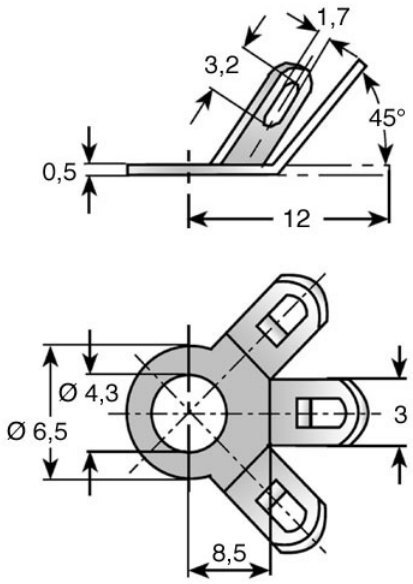

Bending Angle [°]:	45
DIN/ISO:	DIN41496
Finish:	Tin-Plated
Inner Diameter [mm]:	4.3
Length [mm]:	12
Material:	Brass CW508L / CuZn37, lead-free
Material Group:	Brass
Outer Diameter [mm]:	6.5
Weight:	0.32g
Conformities:	Reach COMPLIANT, RoHS COMPLIANT, SVHC COMPLIANT

You can find all information on the web on our article detail page
Soldering Tag DIN 41496 4x12B3 Brass tinned 45°angled hole ø4.3mm

Would you like individual advice?
We look forward to your email to products@ettinger.de.

Subject to change and errors.

ETTINGER GmbH

Ottostraße 5 | 85649 Hofolding | Deutschland | www.ettinger.de | info@ettinger.de | + 49 8104 66 23 88