Article datasheet

Thread Forming Screw DIN7500C M5x10 A2 Plain Stainless Steel Pozi Pan Head

Article-No.: 001.38.549



Image may be similar

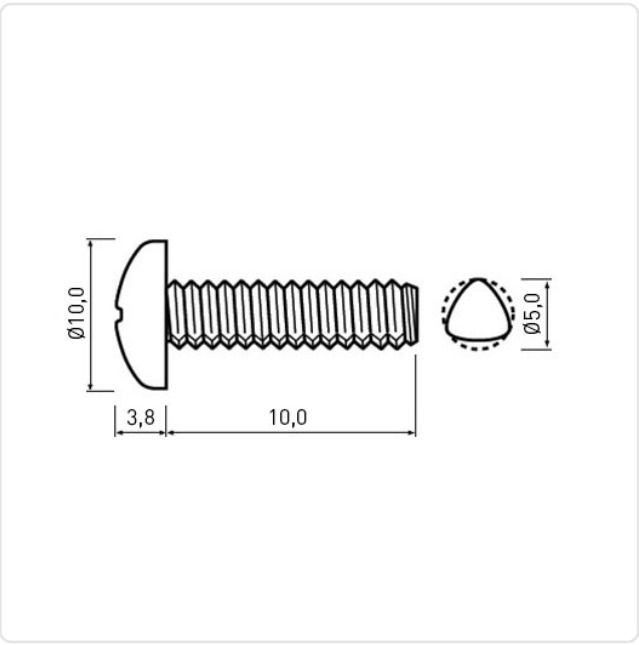

Actuator Size:	Pozidriv PZ2
DIN/ISO:	DIN7500-C
Drive Type:	Cross Recess / Pozidriv-Z
Finish:	Plain
Head Diameter [mm]:	10
Head Height [mm]:	3.8
Head Shape:	Pan Head
Length [mm]:	10
Material:	Stainless Steel AISI 304 / A2
Thread Size:	M5
Thread Type:	Metric
Weight:	24.5g

Conformities

RoHS compliant:	Yes
REACH compliant:	Yes
SVHC free:	Yes

Note: Information on SVHC substances specific to your individual deliveries can be found on your respective delivery note.

You can find all information on the web on our article detail page
Thread Forming Screw DIN7500C M5x10 A2 Plain Stainless Steel Pozi Pan Head

Would you like individual advice?
We look forward to your email to products@ettinger.de.

Subject to change and errors.

ETTINGER GmbH
Ottostraße 5 | 85649 Hofolding | Deutschland | www.ettinger.de | info@ettinger.de | + 49 8104 66 23 88