Article datasheet

Nut cover for round knob ø 16 mm

Article-No.: 041.16.610

Manufacturer: OKW Gehäusesysteme

Manufacturer article-no.: A75.16.010



Image may be similar

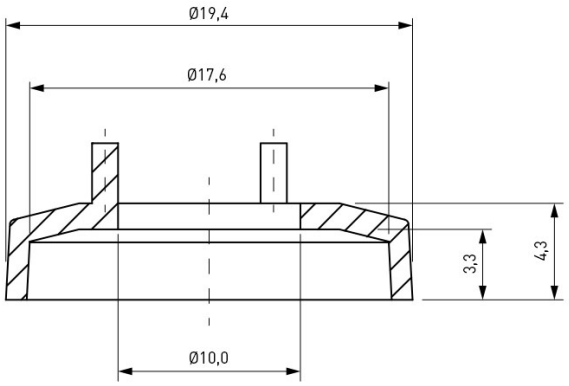

Color:	Black
Marking:	Line
Material:	ABS - Acrylonitrile Butadiene Styrene
Model:	Nut Cover for Combination Knob
Outer Diameter [mm]:	16
Weight:	0.35g

Conformities

RoHS compliant:	Yes
REACH compliant:	Yes
SVHC free:	Yes

Note: Information on SVHC substances specific to your individual deliveries can be found on your respective delivery note.

You can find all information on the web on our article detail page
Nut cover for round knob ø 16 mm

Would you like individual advice?
We look forward to your email to products@ettinger.de.

Subject to change and errors.

ETTINGER GmbH

Ottostraße 5 | 85649 Hofolding | Deutschland | www.ettinger.de | info@ettinger.de | + 49 8104 66 23 88