Article datasheet

Insulated Standoff PA-Brass M/F AF8.4x15 | F=M4x6 M=M4x6

Article-No.: 005.41.415



Image may be similar

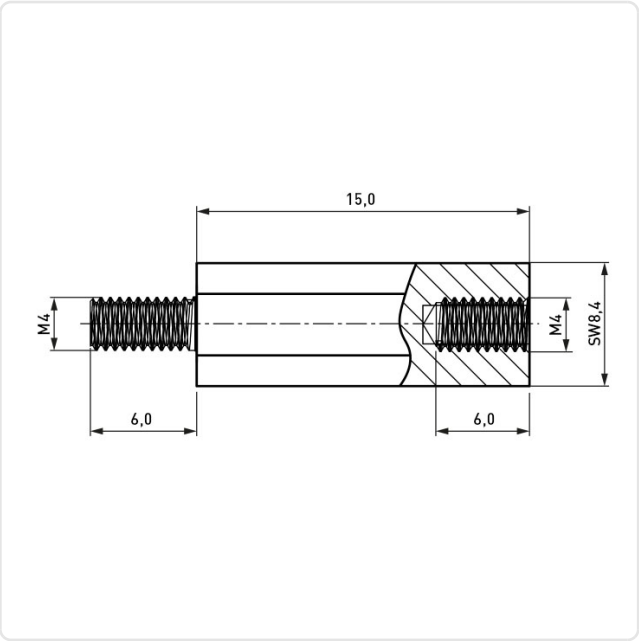

AF / OD [mm]:	8.4
Female Thread Length [mm]:	6
Female Thread Size:	M4
Flammability Class:	UL94-HB
Length [mm]:	15
Male Thread Length [mm]:	6
Male Thread Size:	M4
Material:	Brass CW614N / CuZn39Pb3
Profile:	Hexagonal
Thread Insert Material:	Brass
Weight:	2.77g

Conformities

RoHS compliant:	Yes
Application of RoHS Annex III exemptions:	Yes
REACH compliant:	Yes
SVHC free:	No
SVHC substances:	Listed substance): Lead - CAS-No. 7439-92-1

Note: Information on SVHC substances specific to your individual deliveries can be found on your respective delivery note.

You can find all information on the web on our article detail page
Insulated Standoff PA-Brass M/F AF8.4x15 | F=M4x6 M=M4x6

Would you like individual advice?
We look forward to your email to products@ettinger.de.

Subject to change and errors.

ETTINGER GmbH
Ottostraße 5 | 85649 Hofolding | Deutschland | www.ettinger.de | info@ettinger.de | + 49 8104 66 23 88