Article datasheet

Round Spacer Ø2.1/4.0 x 5.0 PA 6.6 natural Snap-In

Article-No.: 007.91.350



Image may be similar

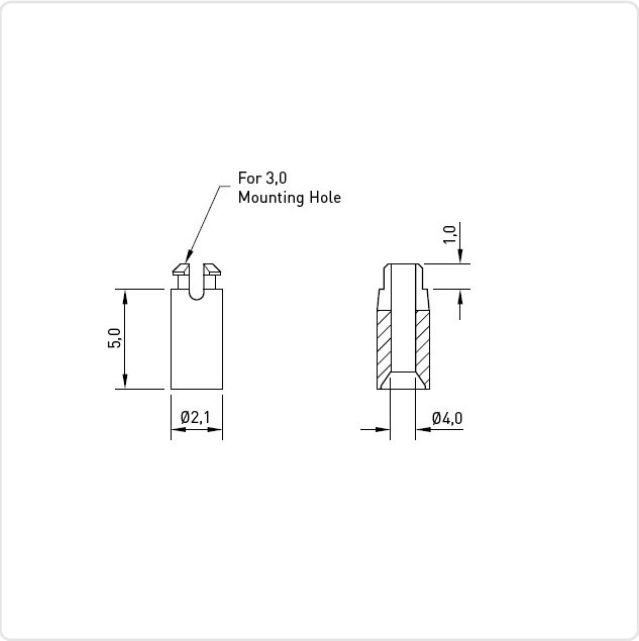

Color:	Natural
Flammability Class:	UL94-V2
For Thread Size:	M2
Inner Diameter [mm]:	2.1
Length [mm]:	5
Material:	PA 6.6
Mounting Hole [mm]:	3
Outer Diameter [mm]:	4
Weight:	0.08g

Conformities

RoHS compliant:	Yes
REACH compliant:	Yes
SVHC free:	Yes

Note: Information on SVHC substances specific to your individual deliveries can be found on your respective delivery note.

You can find all information on the web on our article detail page
Round Spacer Ø2.1/4.0 x 5.0 PA 6.6 natural Snap-In

Would you like individual advice?
We look forward to your email to products@ettinger.de.

Subject to change and errors.

ETTINGER GmbH

Ottostraße 5 | 85649 Hofolding | Deutschland | www.ettinger.de | info@ettinger.de | + 49 8104 66 23 88