Article datasheet

PC Mount Screw Terminal ø3.2mm Brass silver-plated

Article-No.: 013.20.313



Image may be similar

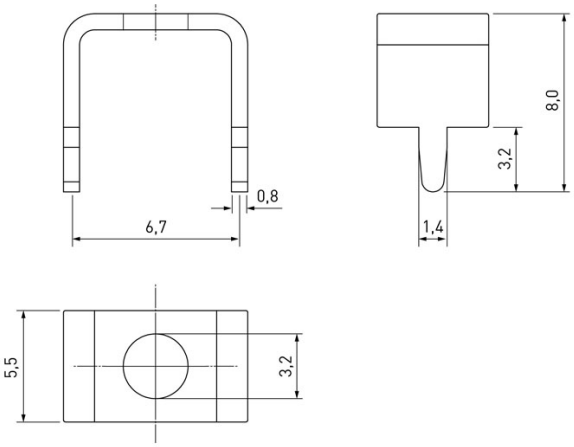

Finish:	Silver-Plated
Grid [mm]:	6.7
Material:	Brass CW508L / CuZn37, lead-free
PCB Hole Ø [mm]:	1.6
Weight:	0.5g

Conformities

RoHS compliant:	Yes
REACH compliant:	Yes
SVHC free:	Yes

Note: Information on SVHC substances specific to your individual deliveries can be found on your respective delivery note.

You can find all information on the web on our article detail page
PC Mount Screw Terminal ø3.2mm Brass silver-plated

Would you like individual advice?
We look forward to your email to products@ettinger.de.

Subject to change and errors.

ETTINGER GmbH

Ottostraße 5 | 85649 Hofolding | Deutschland | www.ettinger.de | info@ettinger.de | + 49 8104 66 23 88