Article datasheet

Flex Cable Connector plug 5 pole with locking ring/max. 32 Amps

Article-No.: 031.41.516

Image may be similar

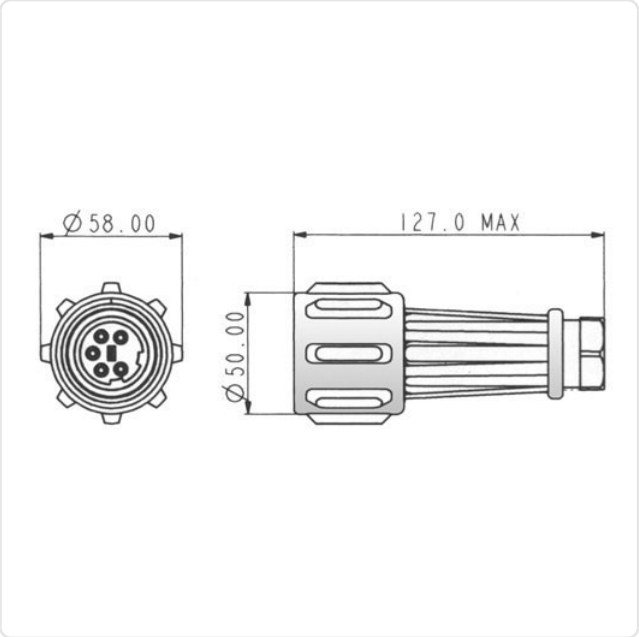

Amperage [A]:	32
Color:	Black
Protection Code:	IP68
Weight:	151g
Conformities:	Reach COMPLIANT, RoHS COMPLIANT, SVHC COMPLIANT

You can find all information on the web on our article detail page
Flex Cable Connector plug 5 pole with locking ring/max. 32 Amps

Would you like individual advice?
We look forward to your email to products@ettinger.de.

Subject to change and errors.

ETTINGER GmbH

Ottostraße 5 | 85649 Hofolding | Deutschland | www.ettinger.de | info@ettinger.de | + 49 8104 66 23 88