Article datasheet

PCB Support 6.4 | ø4.0 | ø1.6 Polyamide 6.6 natural

Article-No.: 006.79.306



Image may be similar

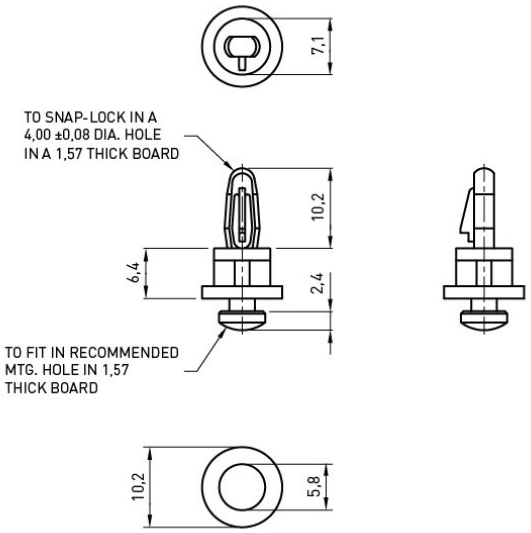

Color:	Natural
Flammability Class:	UL94-V2
Length [mm]:	6.4
Material:	PA 6.6
PCB Hole Ø [mm]:	4
PCB Thickness [mm]:	1,6
Panel Hole Ø [mm]:	6.4
Panel Thickness [mm]:	1,6
Weight:	0.4g

Conformities

RoHS compliant:	Yes
REACH compliant:	Yes
SVHC free:	Yes

Note: Information on SVHC substances specific to your individual deliveries can be found on your respective delivery note.

You can find all information on the web on our article detail page
PCB Support 6.4 | ø4.0 | ø1.6 Polyamide 6.6 natural

Would you like individual advice?
We look forward to your email to products@ettinger.de.

Subject to change and errors.

ETTINGER GmbH

Ottostraße 5 | 85649 Hofolding | Deutschland | www.ettinger.de | info@ettinger.de | + 49 8104 66 23 88