Article datasheet

LED Spacer for ø3mm LED Polycarbonat black

Article-No.: 063.36.120

Image may be similar

Color:	Black
Diameter [mm]:	5
LED Size [mm]:	Ø 3
Length [mm]:	12
Material:	PC - Polycarbonate
Material Group:	Plastic
Conformities:	Reach COMPLIANT, RoHS COMPLIANT, SVHC COMPLIANT

You can find all information on the web on our article detail page
LED Spacer for ø3mm LED Polycarbonat black

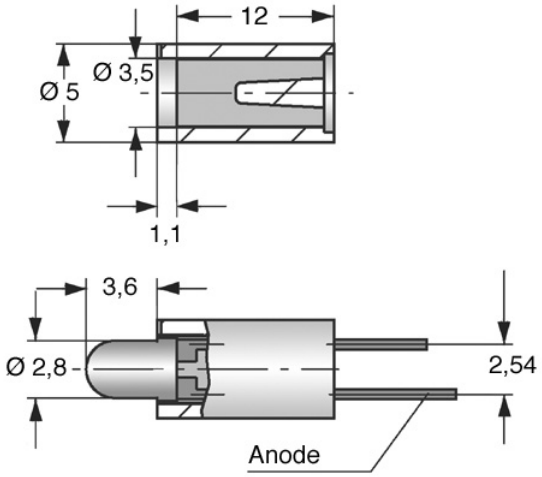

Would you like individual advice?
We look forward to your email to products@ettinger.de.

Subject to change and errors.

ETTINGER GmbH
Ottostraße 5 | 85649 Hofolding | Deutschland | www.ettinger.de | info@ettinger.de | + 49 8104 66 23 88