Article datasheet

Vandal Resistant Switch ø27.8 IP66 Stainless steel 5A 250Vac

Article-No.: 011.10.549

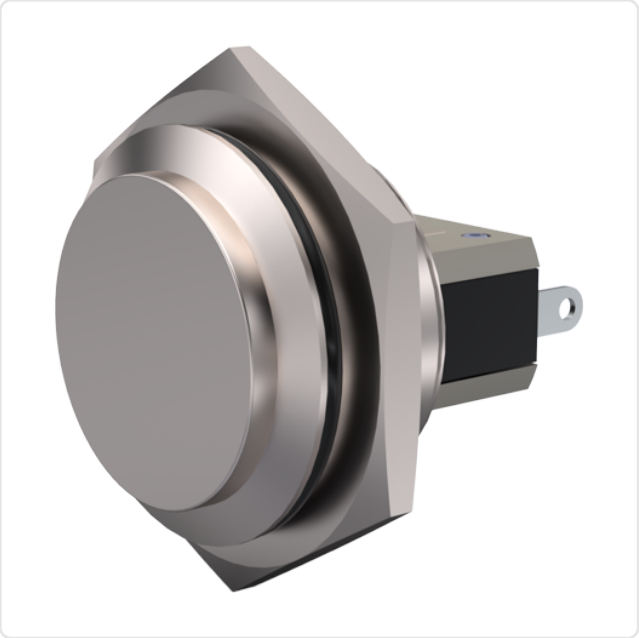

Image may be similar

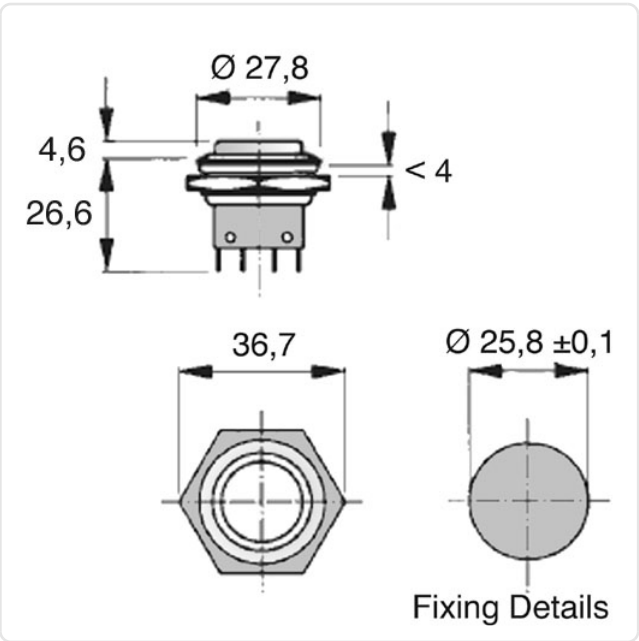

Contact Plating:	Silver-plated
Diameter [mm]:	27.8
Material:	Stainless Steel AISI 316 / A4
Mounting Hole [mm]:	25.8
Protection Code:	IP66
Weight:	50.4g

Conformities

RoHS compliant:	Yes
REACH compliant:	Yes
SVHC free:	Yes

Note: Information on SVHC substances specific to your individual deliveries can be found on your respective delivery note.

You can find all information on the web on our article detail page
Vandal Resistant Switch ø27.8 IP66 Stainless steel 5A 250Vac

Would you like individual advice?
We look forward to your email to products@ettinger.de.

Subject to change and errors.

ETTINGER GmbH
Ottostraße 5 | 85649 Hofolding | Deutschland | www.ettinger.de | info@ettinger.de | + 49 8104 66 23 88