Article datasheet

Plastic Instrument Enclosure 1598 / IP 54 / 135 x 50 x 134 mm

Article-No.: 097.81.137

Manufacturer: Hammond

Manufacturer article-no.: 1598BGY

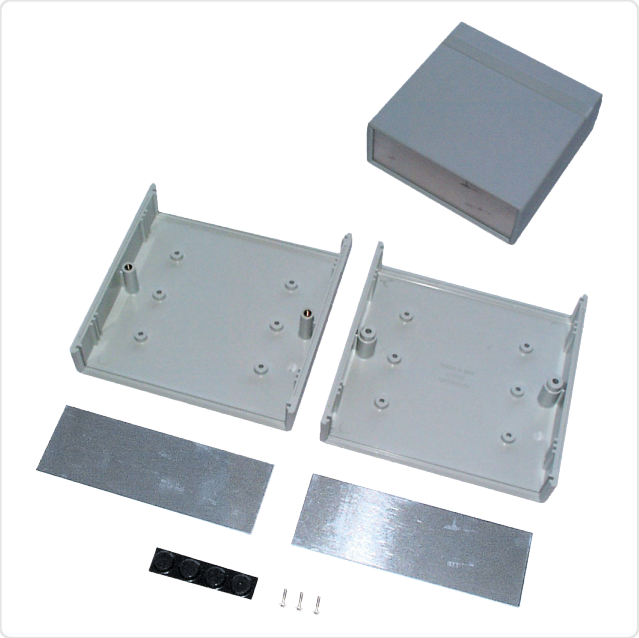

Image may be similar

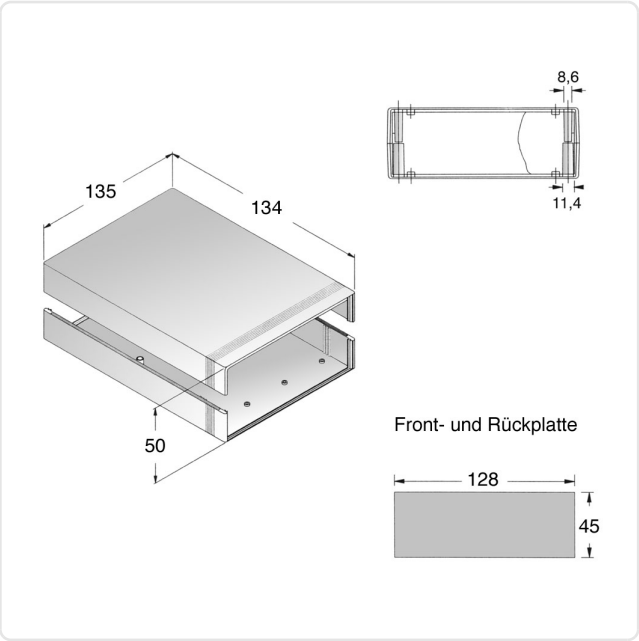

Color:	Gray
Flammability Class:	UL94-V0
Height [mm]:	50
Length [mm]:	134
Material:	ABS - Acrylonitrile Butadiene Styrene
Protection Code:	IP54
Width [mm]:	135
Weight:	237.93g

Conformities

RoHS compliant:	Yes
REACH compliant:	Yes
SVHC free:	Yes

Note: Information on SVHC substances specific to your individual deliveries can be found on your respective delivery note.

You can find all information on the web on our article detail page
Plastic Instrument Enclosure 1598 / IP 54 / 135 x 50 x 134 mm

Would you like individual advice?
We look forward to your email to products@ettinger.de.

Subject to change and errors.

ETTINGER GmbH

Ottostraße 5 | 85649 Hofolding | Deutschland | www.ettinger.de | info@ettinger.de | + 49 8104 66 23 88