Article datasheet

Self-Clinching Nut M3 | 0.9 Galvanized Steel

Article-No.: 002.14.031

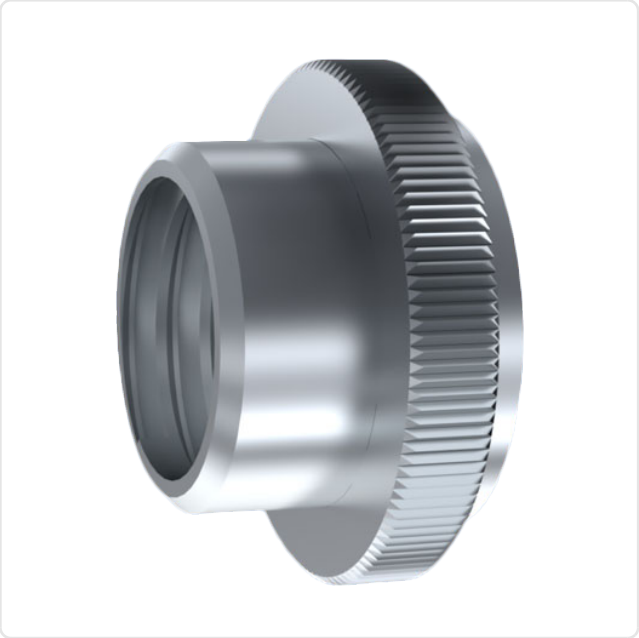

Image may be similar

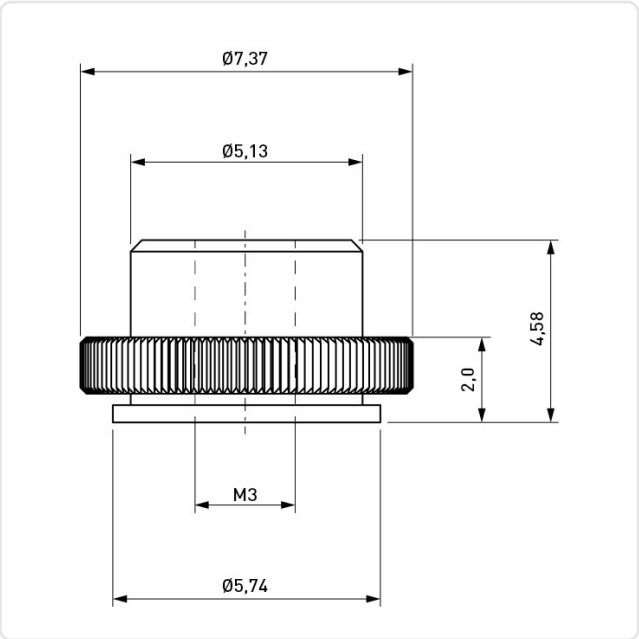

Area of Application:	For Metallic Materials
Finish:	Zinc Plated, 5 µm, A2K
Height [mm]:	4.58
Material:	Steel AISI 12L13 / 11SMnPb30
Outer Diameter [mm]:	7.37
Panel Hole Ø [mm]:	5.8
Panel Thickness [mm]:	0,9
Thread Size:	M3
Weight:	0.66g

Conformities

RoHS compliant:	Yes
REACH compliant:	Yes
SVHC free:	Yes

Note: Information on SVHC substances specific to your individual deliveries can be found on your respective delivery note.

You can find all information on the web on our article detail page
Self-Clinching Nut M3 | 0.9 Galvanized Steel

Would you like individual advice?
We look forward to your email to products@ettinger.de.

Subject to change and errors.

ETTINGER GmbH

Ottostraße 5 | 85649 Hofolding | Deutschland | www.ettinger.de | info@ettinger.de | + 49 8104 66 23 88