Article datasheet

# Insulated Standoff PA-Brass M/F AF7x8 | F=M3x4 M=M3x6

**Article-No.: 005.41.935**



**Image may be similar**

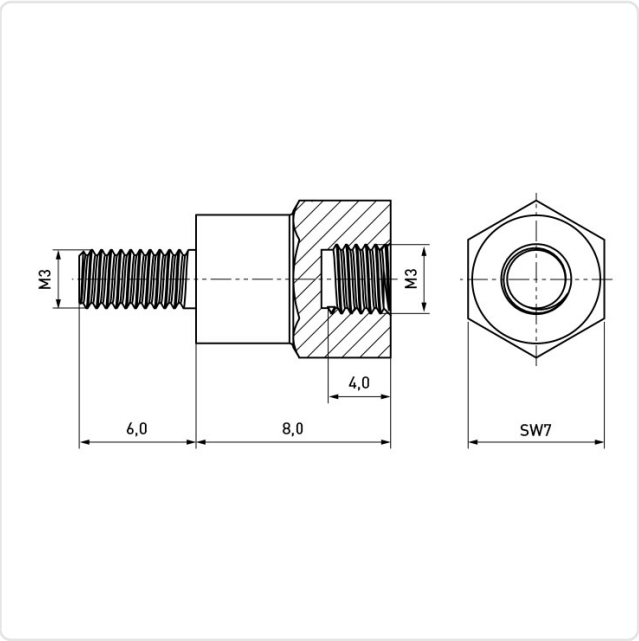


| | |
|---|---|
| AF / OD [mm]: | 7 |
| Female Thread Length [mm]: | 4 |
| Female Thread Size: | M3 |
| Flammability Class: | UL94-HB |
| Length [mm]: | 8 |
| Male Thread Length [mm]: | 6 |
| Male Thread Size: | M3 |
| Material: | PA 6.0 |
| Profile: | Hexagonal |
| Thread Insert Material: | Brass |
| Weight: | 0.99g |

**Conformities**

| | |
|---|---|
| RoHS compliant: | Yes |
| REACH compliant: | Yes |
| SVHC free: | No |
| SVHC substances: | Listed substance): Lead - CAS-No. 7439-92-1 |

**Note:** Information on SVHC substances specific to your individual deliveries can be found on your respective delivery note.

**You can find all information on the web on our article detail page**
**Insulated Standoff PA-Brass M/F AF7x8 | F=M3x4 M=M3x6**

**Would you like individual advice?**
**We look forward to your email to products@ettinger.de.**

**Subject to change and errors.**

**ETTINGER GmbH**
Ottostraße 5 | 85649 Hofolding | Deutschland | www.ettinger.de | info@ettinger.de | + 49 8104 66 23 88