Article datasheet

Thread-Locking Screw ISO14583 M2.5x10 Zinc Plated Steel 8.8 Torx Blue PA Patch

Article-No.: 083.55.246



Image may be similar

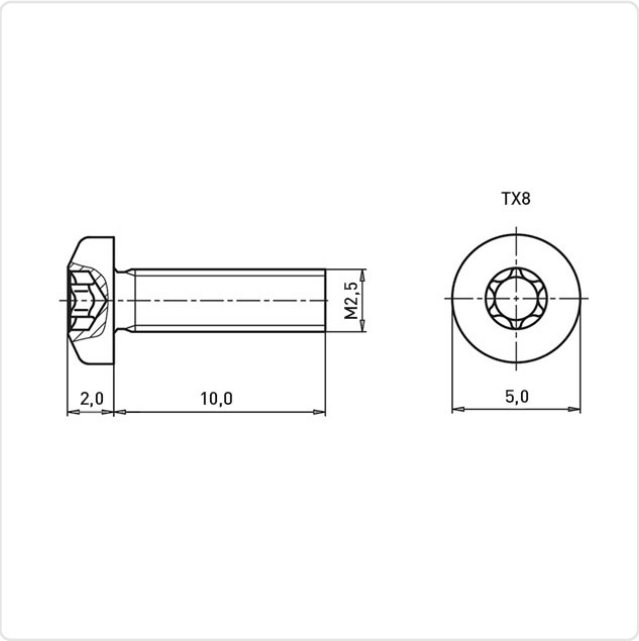

Actuator Size:	Torx T8
DIN/ISO:	ISO14583
Drive Type:	TORX
Head Diameter [mm]:	5
Head Height [mm]:	2.1
Head Shape:	Pan Head
Length [mm]:	10
Thread Locking:	Blue Nylon Patch
Thread Size:	M2.5
Weight:	0.48g

Conformities

SVHC free:	Yes

Note: Information on SVHC substances specific to your individual deliveries can be found on your respective delivery note.

You can find all information on the web on our article detail page
Thread-Locking Screw ISO14583 M2.5x10 Zinc Plated Steel 8.8 Torx Blue PA Patch

Would you like individual advice?
We look forward to your email to products@ettinger.de.

Subject to change and errors.

ETTINGER GmbH
Ottostraße 5 | 85649 Hofolding | Deutschland | www.ettinger.de | info@ettinger.de | + 49 8104 66 23 88