ETTINGER
Elektronik-Bauelemente

Article datasheet

Solder Terminal Pin ø1.0x12.5mm Brass silver-plated - square press-in

Article-No.: 013.14.329

Image may be similar

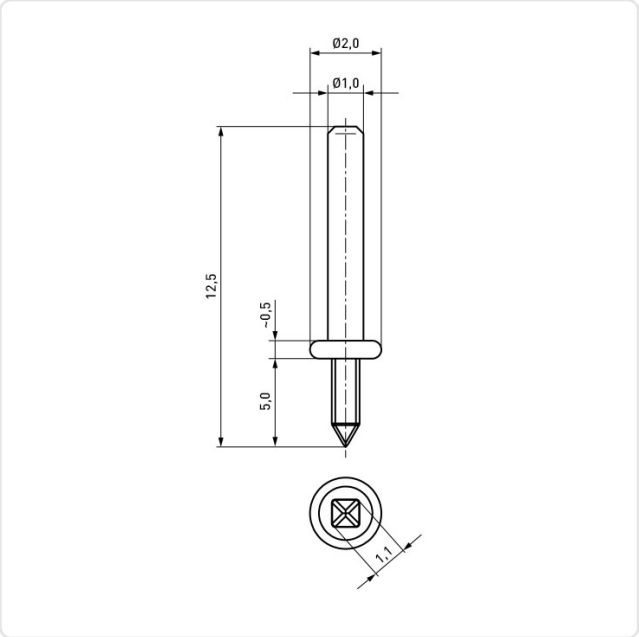

Diameter [mm]:	1
Finish:	Silver-Plated
Length [mm]:	12.5
Material:	Messing
PCB Hole Ø [mm]:	1
Plug-In Length [mm]:	7
Weight:	0.09g
Conformities:	Reach COMPLIANT, RoHS COMPLIANT, SVHC COMPLIANT

You can find all information on the web on our article detail page

Would you like individual advice?
We look forward to your email to products@ettinger.de.

Subject to change and errors.

ETTINGER GmbH

Ottostraße 5 | 85649 Hofolding | Deutschland | www.ettinger.de | info@ettinger.de | + 49 8104 66 23 88