ETTINGER
Elektronik-Bauelemente

Article datasheet

Twist Lock on Base 20x20mm without adhesive tape

Article-No.: 072.62.711

Image may be similar

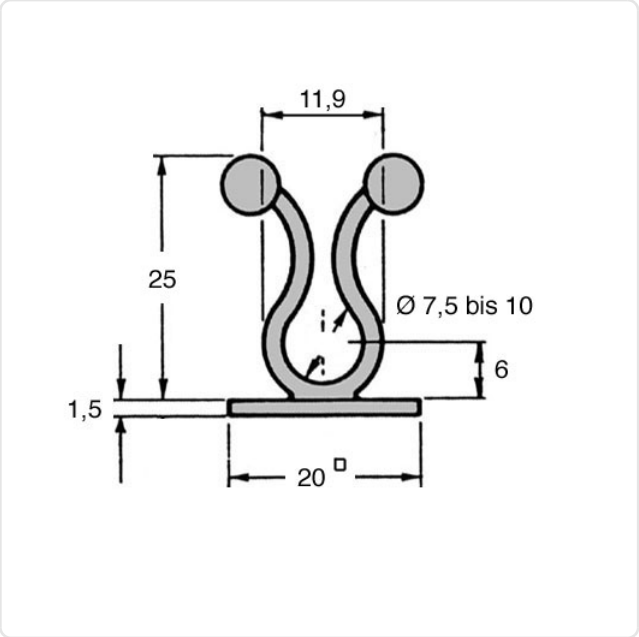

Bundle Diameter [mm]:	3,0-10,0
Color:	Natural
Flammability Class:	UL94-V2
Material:	PA 6.6
Material Group:	Plastic
Model:	Fastening Plate, Self-Adhesive
Weight:	1.09g
Conformities:	Reach COMPLIANT, RoHS COMPLIANT, SVHC COMPLIANT

You can find all information on the web on our article detail page

Would you like individual advice?
We look forward to your email to products@ettinger.de.

Subject to change and errors.

ETTINGER GmbH

Ottostraße 5 | 85649 Hofolding | Deutschland | www.ettinger.de | info@ettinger.de | + 49 8104 66 23 88