Article datasheet

Countersunk Screw VSM13328 M3x5 Zinc Plated Steel 4.8 Slotted

Article-No.: 001.71.311



Image may be similar

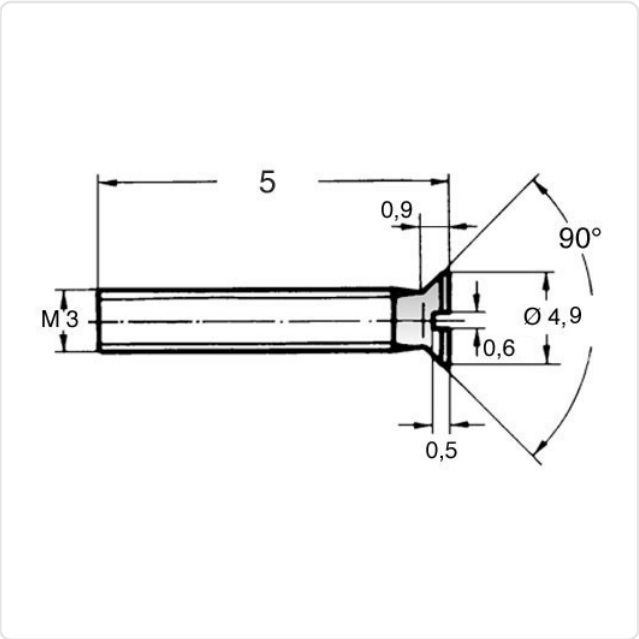

Drive Type:	Slotted
Finish:	Zinc Plated, 5 µm, A2K
Head Diameter [mm]:	5.6
Head Height [mm]:	1.65
Head Shape:	Countersunk Head
Length [mm]:	5
Material:	Steel 4.8
Thread Size:	M3
Weight:	0.26g

Conformities

RoHS compliant:	Yes
Application of RoHS Annex III exemptions:	Yes
REACH compliant:	Yes
SVHC free:	No
SVHC substances:	Listed substance): Lead - CAS-No. 7439-92-1

Note: Information on SVHC substances specific to your individual deliveries can be found on your respective delivery note.

You can find all information on the web on our article detail page
Countersunk Screw VSM13328 M3x5 Zinc Plated Steel 4.8 Slotted

Would you like individual advice?
We look forward to your email to products@ettinger.de.

Subject to change and errors.

ETTINGER GmbH
Ottostraße 5 | 85649 Hofolding | Deutschland | www.ettinger.de | info@ettinger.de | + 49 8104 66 23 88