Article datasheet

Knurled Knobs / for Hex Screws / ø20mmx6.5mm / black

Article-No.: 002.39.051



Image may be similar

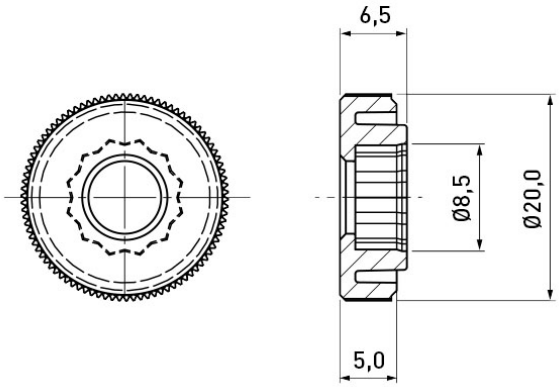

Color:	Black
Diameter [mm]:	20
Flammability Class:	UL94-HB
Height [mm]:	6.5
Material:	POM - Polyoxymethylene
Thread Size:	M5
Weight:	1.47g

Conformities

RoHS compliant:	Yes
REACH compliant:	Yes
SVHC free:	Yes

Note: Information on SVHC substances specific to your individual deliveries can be found on your respective delivery note.

You can find all information on the web on our article detail page
Knurled Knobs / for Hex Screws / ø20mmx6.5mm / black

Would you like individual advice?
We look forward to your email to products@ettinger.de.

Subject to change and errors.

ETTINGER GmbH

Ottostraße 5 | 85649 Hofolding | Deutschland | www.ettinger.de | info@ettinger.de | + 49 8104 66 23 88