ETTINGER
Elektronik-Bauelemente

Article datasheet

Battery Contact Spring steel,nickel-plated

Article-No.: 015.83.343

Manufacturer: Keystone Electronics

Manufacturer article-no.: C-3636-RAM

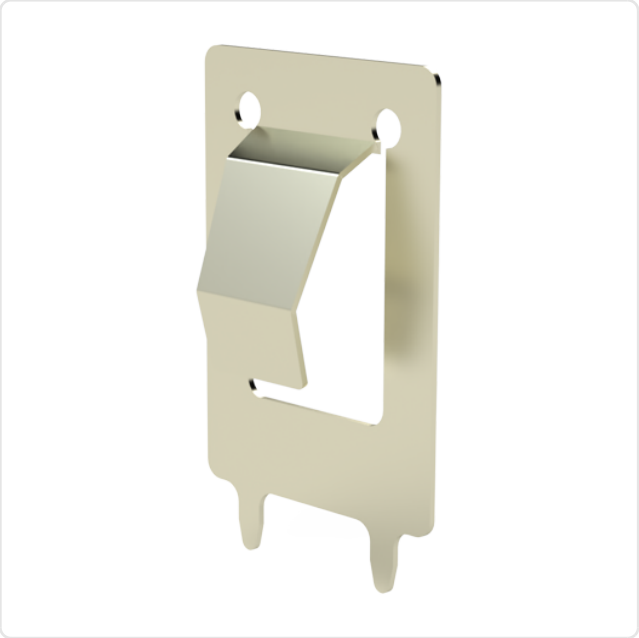

Image may be similar

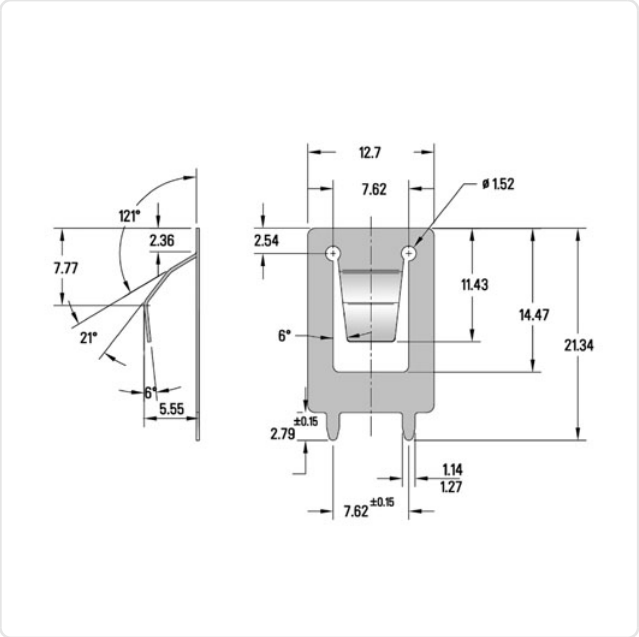

Width [mm]:	12.7
Weight:	0.55g
Conformities:	Reach COMPLIANT, RoHS COMPLIANT, SVHC COMPLIANT

You can find all information on the web on our article detail page

Would you like individual advice?
We look forward to your email to products@ettinger.de.

Subject to change and errors.

ETTINGER GmbH

Ottostraße 5 | 85649 Hofolding | Deutschland | www.ettinger.de | info@ettinger.de | + 49 8104 66 23 88