Article datasheet

Drive Fastener ø3.2/1.0-4.5mm panel Polyoxymethylen(POM),black

Article-No.: 072.17.720



Image may be similar

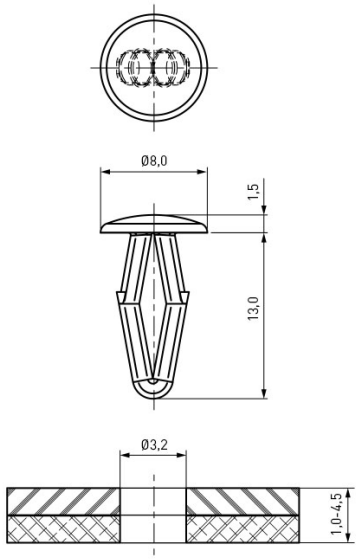

Color:	Black
Head Diameter [mm]:	8
Material:	POM - Polyoxymethylene
Mounting Hole [mm]:	3.2
Panel Thickness Range [mm]:	1.0 - 4.5
Weight:	0.17g

Conformities

RoHS compliant:	Yes
REACH compliant:	Yes
SVHC free:	Yes

Note: Information on SVHC substances specific to your individual deliveries can be found on your respective delivery note.

You can find all information on the web on our article detail page
Drive Fastener ø3.2/1.0-4.5mm panel Polyoxymethylen(POM),black

Would you like individual advice?
We look forward to your email to products@ettinger.de.

Subject to change and errors.

ETTINGER GmbH

Ottostraße 5 | 85649 Hofolding | Deutschland | www.ettinger.de | info@ettinger.de | + 49 8104 66 23 88