Article datasheet

Countersunk Screw ISO14581 M3x10 Zinc Plated Steel 4.8 Torx

Article-No.: 001.55.341



Image may be similar

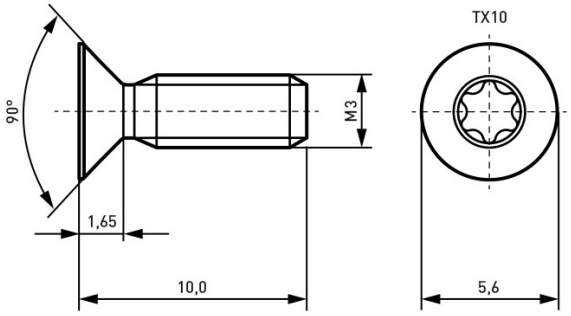

Actuator Size:	Torx T10
DIN/ISO:	ISO7046
Drive Type:	TORX
Finish:	Zinc Plated, 5 µm, A2K
Head Diameter [mm]:	5.5
Head Height [mm]:	1.65
Head Shape:	Countersunk Head
Length [mm]:	10
Material:	Steel 4.8
Thread Size:	M3
Weight:	0.49g

Conformities

RoHS compliant:	Yes
REACH compliant:	Yes
SVHC free:	No
SVHC substances:	Listed substance): Lead - CAS-No. 7439-92-1

Note: Information on SVHC substances specific to your individual deliveries can be found on your respective delivery note.

You can find all information on the web on our article detail page [Countersunk Screw ISO14581 M3x10 Zinc Plated Steel 4.8 Torx]

Would you like individual advice?
We look forward to your email to products@ettinger.de.

Subject to change and errors.

ETTINGER GmbH

Ottostraße 5 | 85649 Hofolding | Deutschland | www.ettinger.de | info@ettinger.de | + 49 8104 66 23 88