Article datasheet

TOP-Marker for TOP-Turning Knob

Article-No.: 053.01.005

Manufacturer: OKW Gehäusesysteme

Manufacturer article-no.: A1101005/GRUEN

Image may be similar

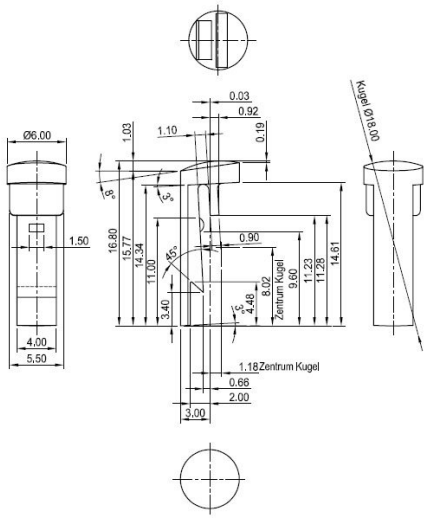

Color:	Green
Material:	PA 6.0
Material Group:	Plastic
Model:	Marker for TOP Knob
Weight:	0.21g
Conformities:	Reach COMPLIANT, RoHS COMPLIANT, SVHC COMPLIANT

You can find all information on the web on our article detail page
TOP-Marker for TOP-Turning Knob

Would you like individual advice?
We look forward to your email to products@ettinger.de.

Subject to change and errors.