Article datasheet

Threaded Block 6x4x4 | 2x M2 Nickel-Plated Brass

Article-No.: 005.60.113



Image may be similar

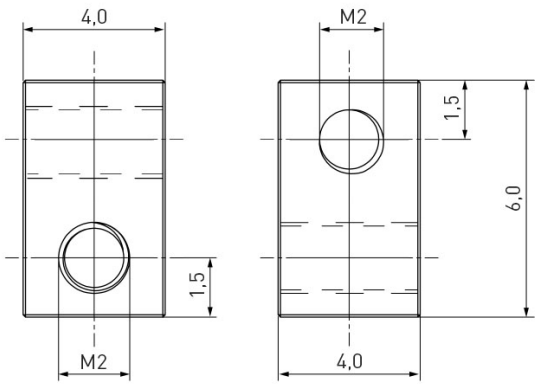

Finish:	Nickel-Plated, 3 µm, E1E
Length [mm]:	6
Material:	Brass C6801, lead-free
Thread 1 / Hole 1:	M2
Thread 1 Length [mm]:	4
Thread 2 / Hole 2:	M2
Thread 2 Length [mm]:	4
Weight:	0.62g

Conformities

SVHC free:	Yes

Note: Information on SVHC substances specific to your individual deliveries can be found on your respective delivery note.

You can find all information on the web on our article detail page [Threaded Block 6x4x4 | 2x M2 Nickel-Plated Brass]

Would you like individual advice?
We look forward to your email to products@ettinger.de.

Subject to change and errors.

ETTINGER GmbH

Ottostraße 5 | 85649 Hofolding | Deutschland | www.ettinger.de | info@ettinger.de | + 49 8104 66 23 88