Article datasheet

Micro Jack Pin Solder Mount Brass gold-plated

Article-No.: 012.16.364

Manufacturer: Keystone Electronics

Manufacturer article-no.: 1417

Image may be similar

Diameter [mm]:	1.9
Finish:	Gold-Plated
Length [mm]:	5.2
Material:	Messing
PCB Hole Ø [mm]:	1.9
Plug-In Length [mm]:	4.8
Weight:	0.05g
Conformities:	Reach COMPLIANT, RoHS COMPLIANT, SVHC NOT COMPLIANT

You can find all information on the web on our article detail page
Micro Jack Pin Solder Mount Brass gold-plated

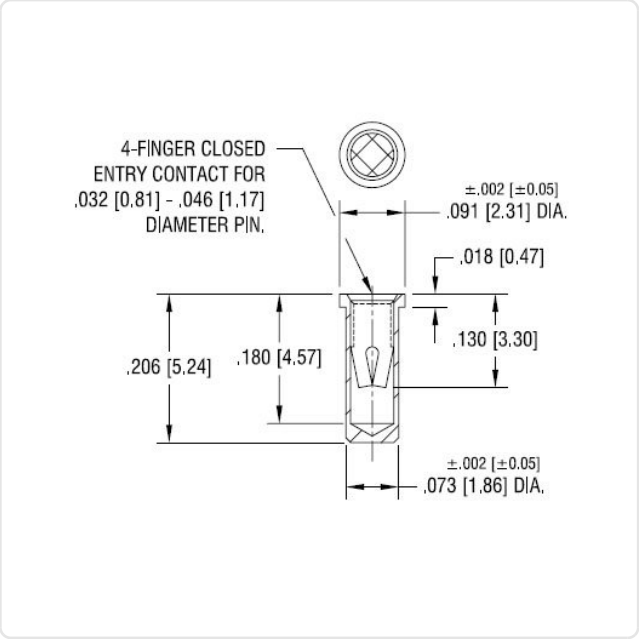

Would you like individual advice?
We look forward to your email to products@ettinger.de.

Subject to change and errors.

ETTINGER GmbH

Ottostraße 5 | 85649 Hofolding | Deutschland | www.ettinger.de | info@ettinger.de | + 49 8104 66 23 88