Article datasheet

Handle 300/330mm M8 Alu,with black plastic cover

Article-No.: 029.52.303



Image may be similar

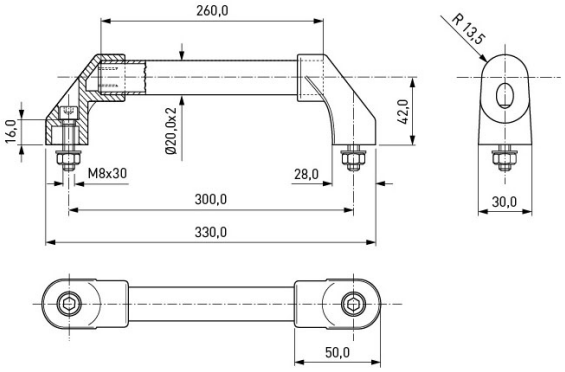

Dist. Mounting Holes [mm]:	300
Material:	Aluminum ENAW-6060 / AlMgSi, lead-free
Model:	Equipment Handle
Thread Size:	M8
Weight:	215g

Conformities

RoHS compliant:	Yes
REACH compliant:	Yes
SVHC free:	Yes

Note: Information on SVHC substances specific to your individual deliveries can be found on your respective delivery note.

You can find all information on the web on our article detail page Handle 300/330mm M8 Alu,with black plastic cover

Would you like individual advice?
We look forward to your email to products@ettinger.de.

Subject to change and errors.

ETTINGER GmbH

Ottostraße 5 | 85649 Hofolding | Deutschland | www.ettinger.de | info@ettinger.de | + 49 8104 66 23 88