Article datasheet

Countersunk Screw ISO7047 M4x10 Nickel Plated Steel 4.8 Cross Recessed

Article-No.: 001.12.447



Image may be similar

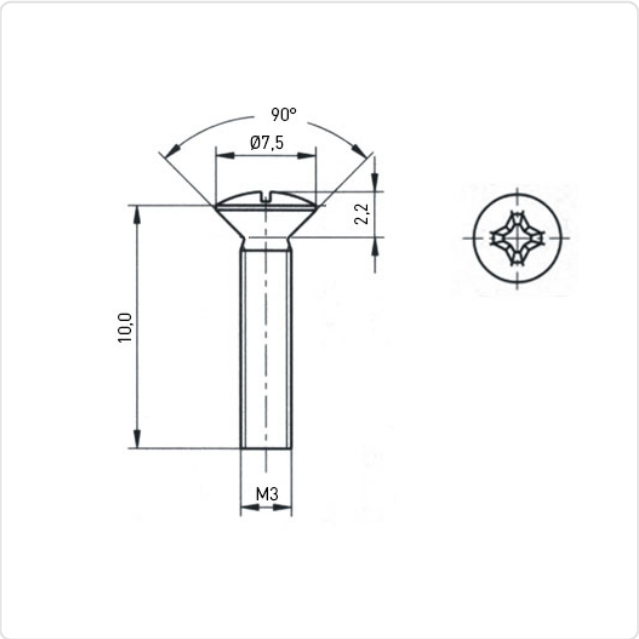

Actuator Size:	Phillips PH2
DIN/ISO:	ISO7047
Drive Type:	Cross Recess / Phillips-H
Finish:	Nickel-Plated, 3 µm, E1E
Head Diameter [mm]:	7.5
Head Height [mm]:	2.2
Head Shape:	Countersunk Head
Length [mm]:	10
Material:	Steel 4.8
Thread Size:	M4
Weight:	1.14g

Conformities

SVHC free:	Yes

Note: Information on SVHC substances specific to your individual deliveries can be found on your respective delivery note.

You can find all information on the web on our article detail page [Countersunk Screw ISO7047 M4x10 Nickel Plated Steel 4.8 Cross Recessed]

Would you like individual advice?
We look forward to your email to products@ettinger.de.

Subject to change and errors.

ETTINGER GmbH

Ottostraße 5 | 85649 Hofolding | Deutschland | www.ettinger.de | info@ettinger.de | + 49 8104 66 23 88