Article datasheet

Square Thin Nut DIN562 M5 A2 Plain Stainless Steel

Article-No.: 002.11.059

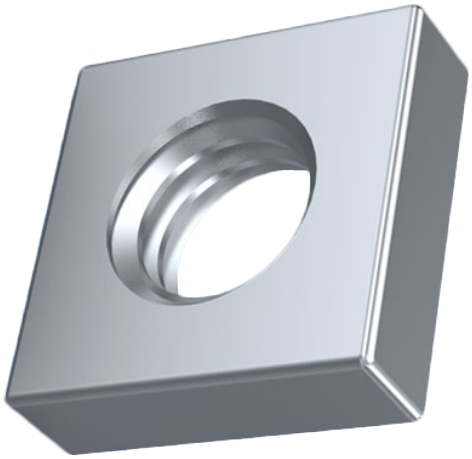

Image may be similar

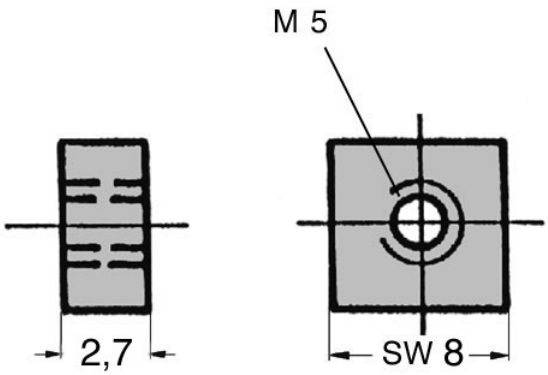

AF / OD [mm]:	8
DIN/ISO:	DIN562
Finish:	Plain
Height [mm]:	2.7
Material:	Stainless Steel AISI 304 / A2
Thread Size:	M5
Weight:	0.93g

Conformities

RoHS compliant:	Yes
REACH compliant:	Yes
SVHC free:	Yes

Note: Information on SVHC substances specific to your individual deliveries can be found on your respective delivery note.

You can find all information on the web on our article detail page
Square Thin Nut DIN562 M5 A2 Plain Stainless Steel

Would you like individual advice?
We look forward to your email to products@ettinger.de.

Subject to change and errors.

ETTINGER GmbH
Ottostraße 5 | 85649 Hofolding | Deutschland | www.ettinger.de | info@ettinger.de | + 49 8104 66 23 88