ETTINGER
Elektronik-Bauelemente

Article datasheet

Thread-Locking Screw ISO14583 M3x16 Galvanized Steel 4.8 Torx Blue PA Patch

Article-No.: 083.55.366

Image may be similar

Actuator Size:	Torx T10
DIN/ISO:	ISO14583
Drive Type:	TORX
Finish:	Galvanized, Blue, 5 µm, A2K
Head Diameter [mm]:	5.6
Head Height [mm]:	2.4
Head Shape:	Pan Head
Length [mm]:	16
Material:	Steel 4.8
Material Group:	Stahl
Thread Locking:	Blue Nylon Patch
Thread Size:	M3
Weight:	1.01g
Conformities:	Reach COMPLIANT, RoHS COMPLIANT, SVHC COMPLIANT

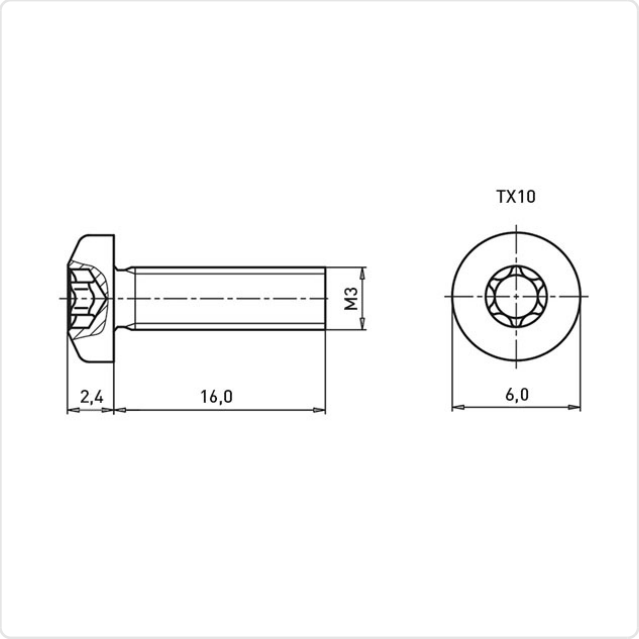

You can find all information on the web on our article detail page

Would you like individual advice?
We look forward to your email to products@ettinger.de.

Subject to change and errors.

ETTINGER GmbH

Ottostraße 5 | 85649 Hofolding | Deutschland | www.ettinger.de | info@ettinger.de | + 49 8104 66 23 88